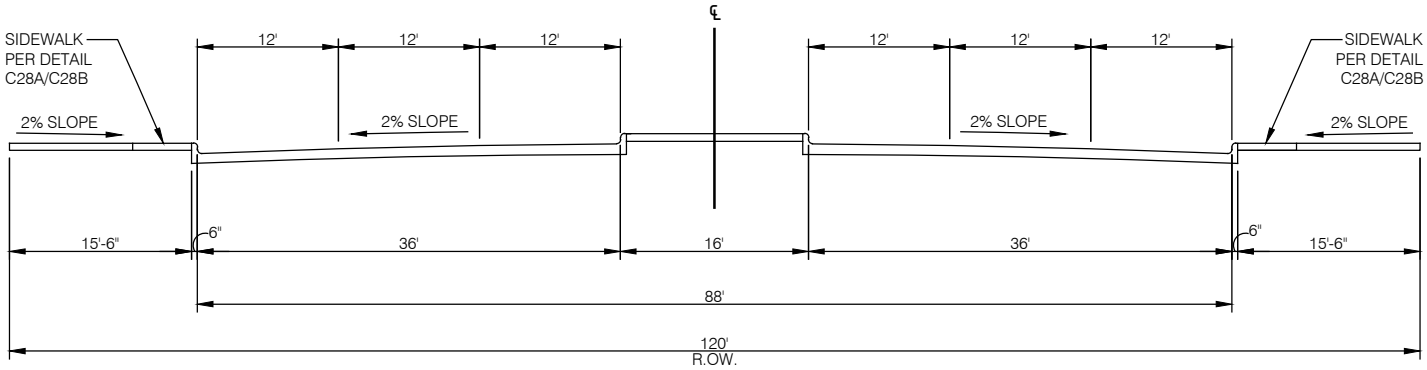

1 TYPE 'AA' - MAJOR ARTERIAL

NOT TO SCALE

NOTE: SEE PAVEMENT DETAIL SHEET
FOR STREET CONSTRUCTION
SPECIFICATIONS

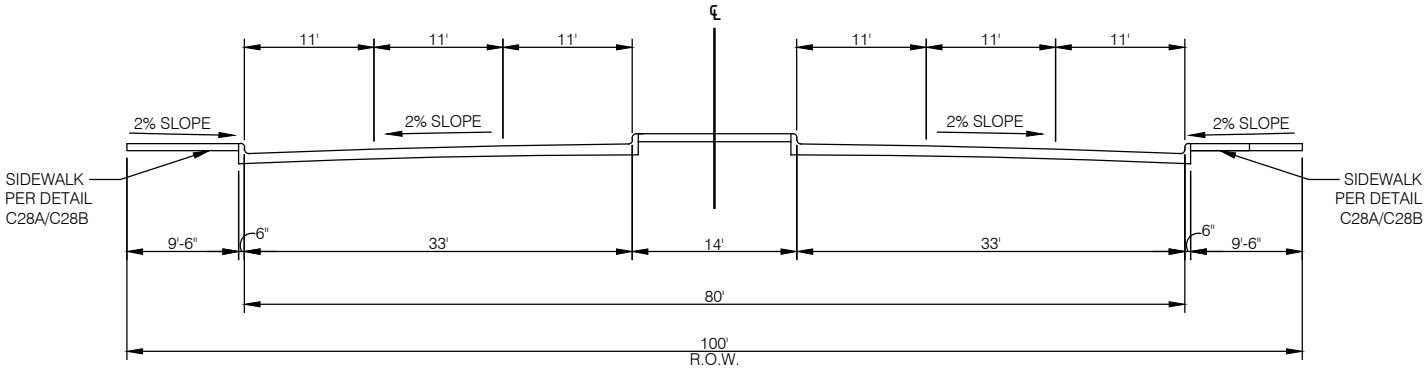

2 TYPE 'A' - MAJOR ARTERIAL

NOT TO SCALE

	DATE	TRANSPORTATION AND PUBLIC WORKS DEPARTMENT	SHEET. #
WEATHERFORD 1858 TRUE TEXAS	01/2020		C1
	DRAWN BY	MAJOR ARTERIAL STREET SECTION DETAILS	
	CITY OF WEATHERFORD		

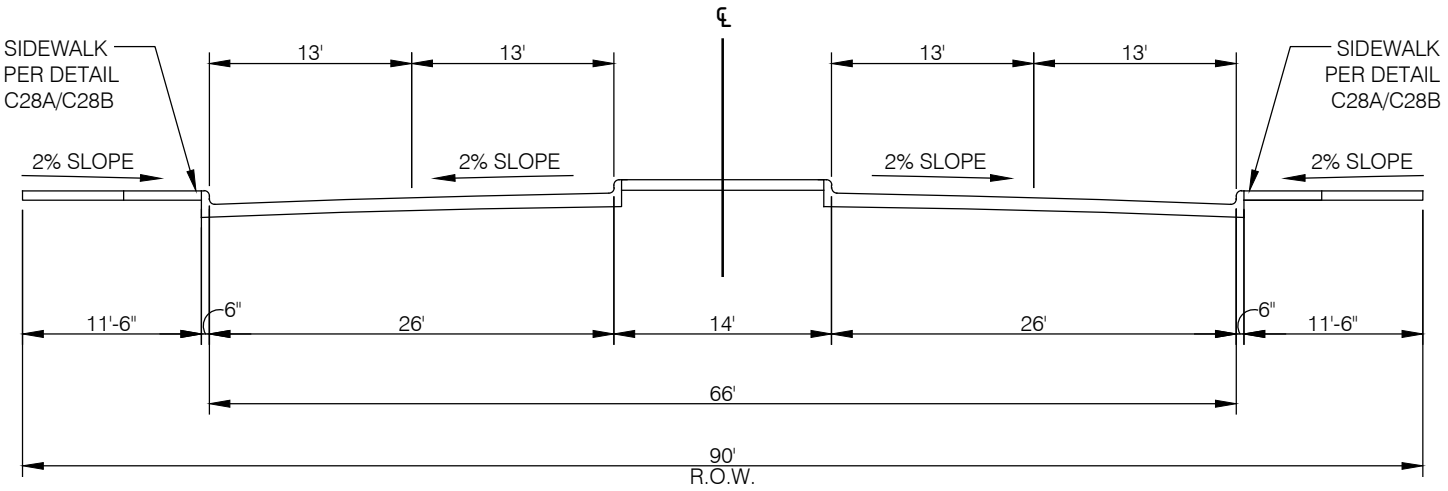

1 TYPE 'B' - MINOR ARTERIAL

NOT TO SCALE

NOTE: SEE PAVEMENT DETAIL SHEET
FOR STREET CONSTRUCTION
SPECIFICATIONS

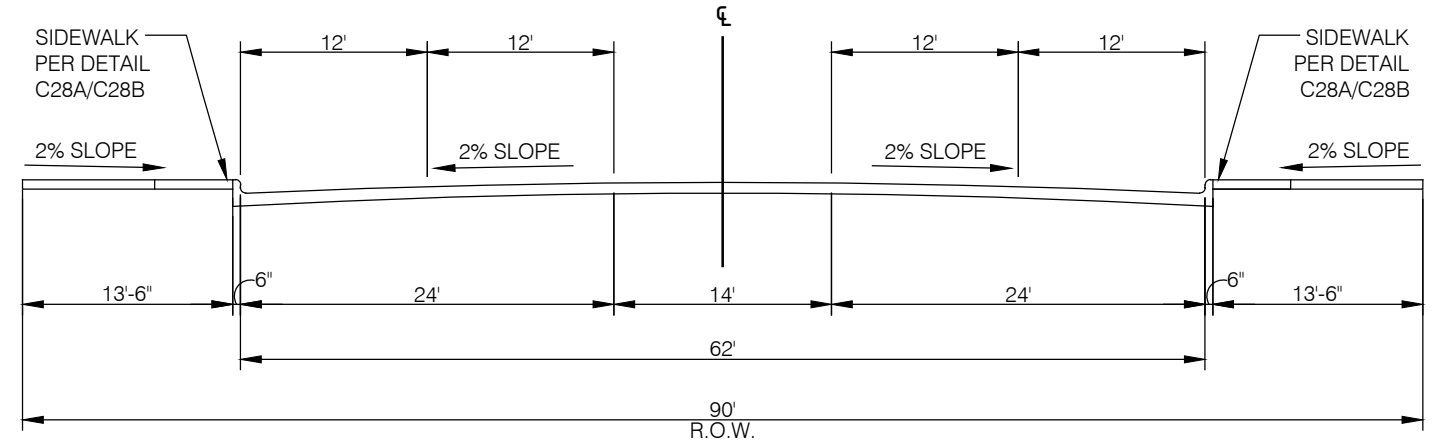

2 TYPE 'B5' - MINOR ARTERIAL COMMERCIAL

NOT TO SCALE

	DATE	TRANSPORTATION AND PUBLIC WORKS DEPARTMENT	SHEET. #
WEATHERFORD 1858 TRUE TEXAS	01/2020		C2
	DRAWN BY	MINOR ARTERIAL STREET SECTION DETAILS	
	CITY OF WEATHERFORD		

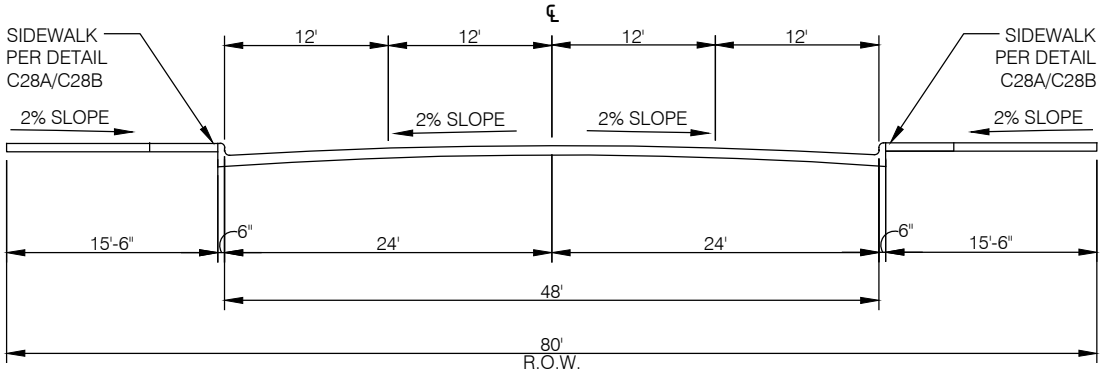

1 TYPE 'C' - MAJOR COLLECTOR

NOT TO SCALE RESIDENTIAL

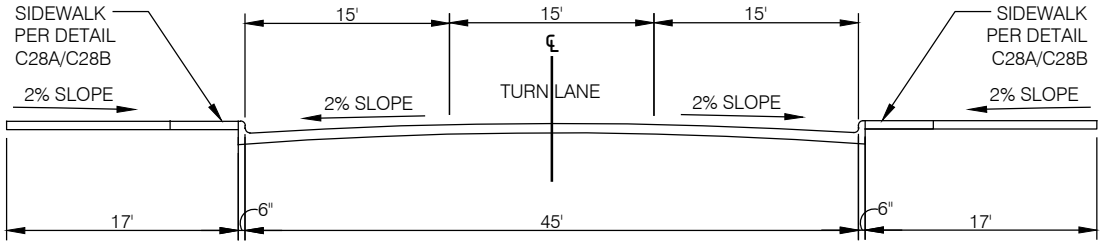

2 TYPE 'C3' - MAJOR COLLECTOR

NOT TO SCALE COMMERCIAL

NOTE: SEE PAVEMENT DETAIL SHEET
FOR STREET CONSTRUCTION
SPECIFICATIONS

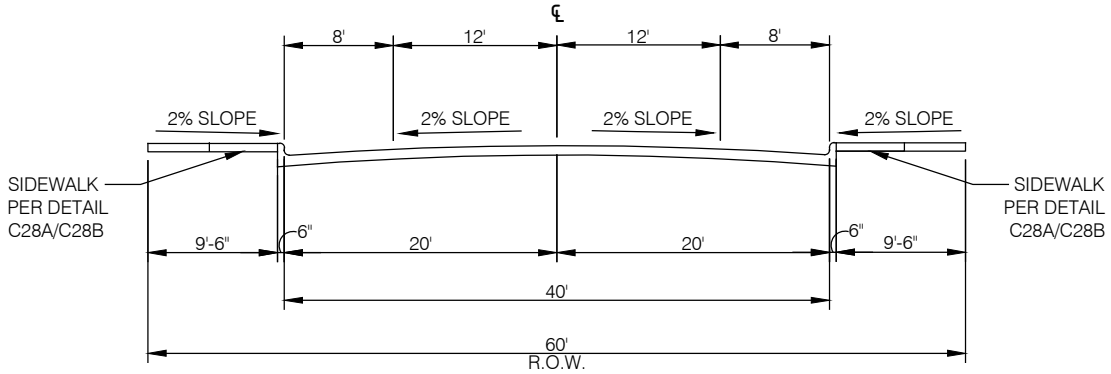

3 TYPE 'D' - MINOR COLLECTOR

NOT TO SCALE COMMERCIAL

	DATE	TRANSPORTATION AND PUBLIC WORKS DEPARTMENT	SHEET. #
WEATHERFORD 1858 TRUE TEXAS	01/2020		C3
	DRAWN BY	COLLECTOR STREET SECTION DETAILS	
	CITY OF WEATHERFORD		

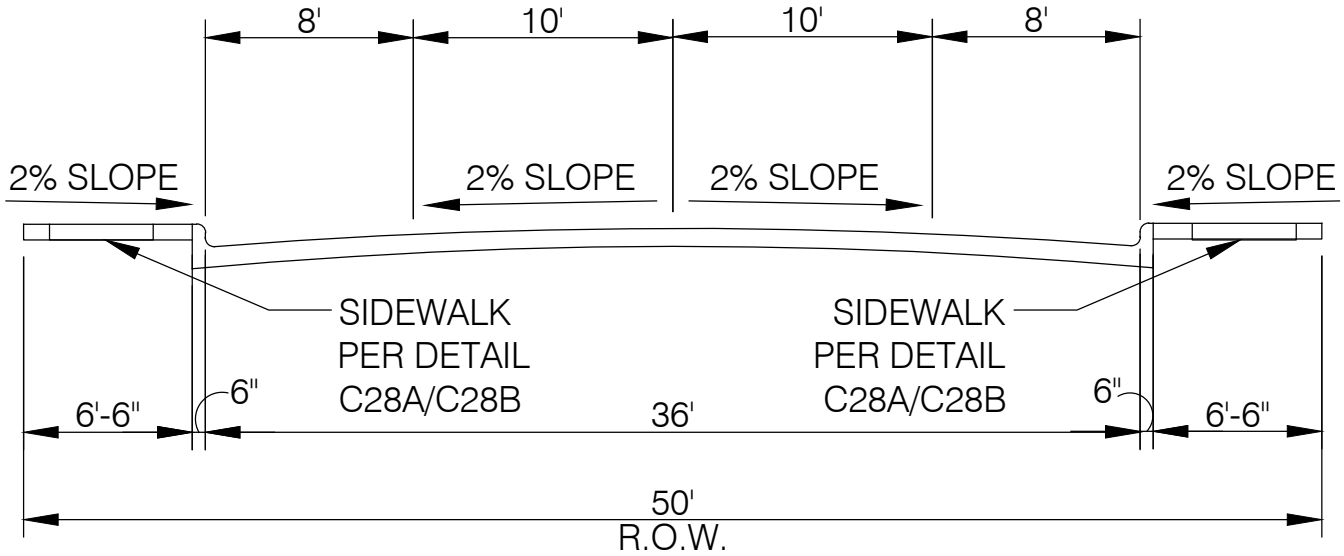

1 RESIDENTIAL COLLECTOR

NOT TO SCALE

NOTE: SEE PAVEMENT DETAIL SHEET
FOR STREET CONSTRUCTION
SPECIFICATIONS

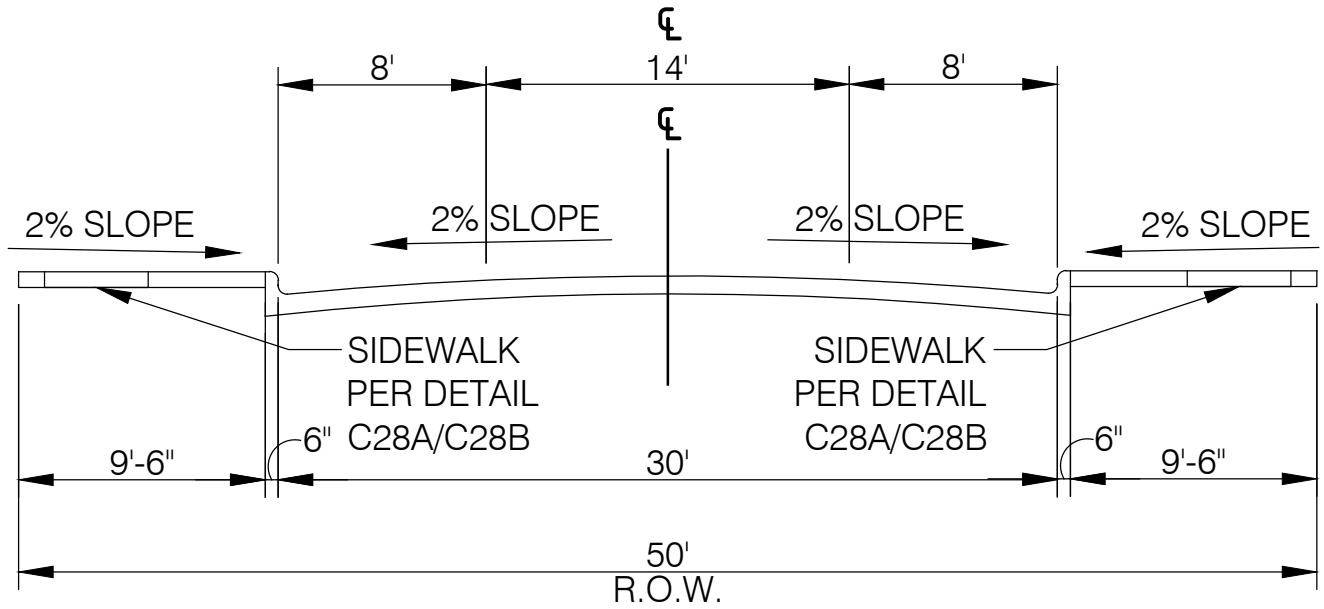

2 LOCAL 'A' - RESIDENTIAL

NOT TO SCALE

	DATE	TRANSPORTATION AND PUBLIC WORKS DEPARTMENT	SHEET. #
WEATHERFORD 1858 TRUE TEXAS	01/2020		C4
	DRAWN BY	LOCAL STREET SECTION DETAILS	
	CITY OF WEATHERFORD		

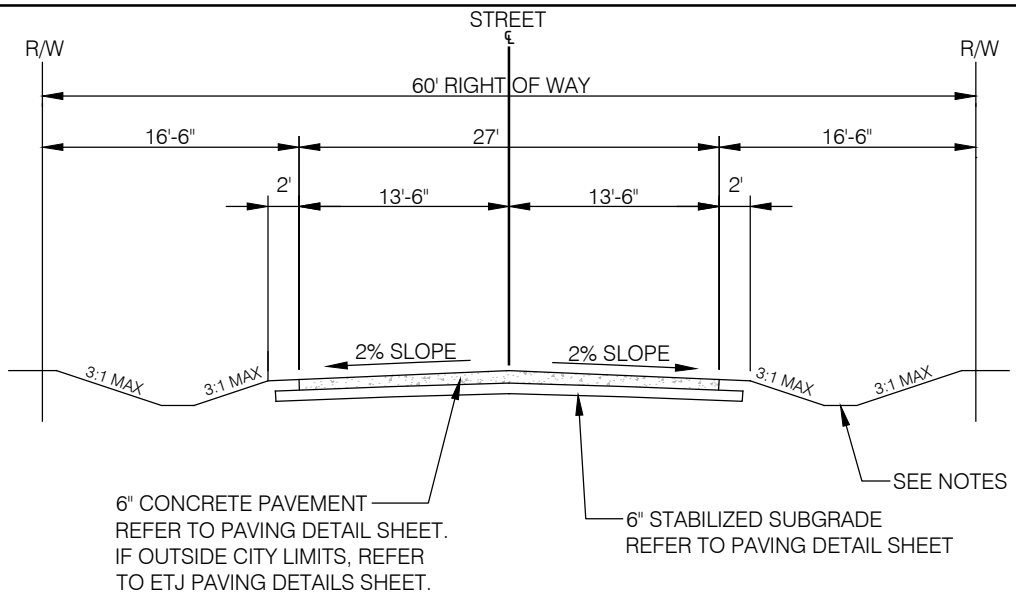

1 RURAL LOCAL SECTION

NOT TO SCALE

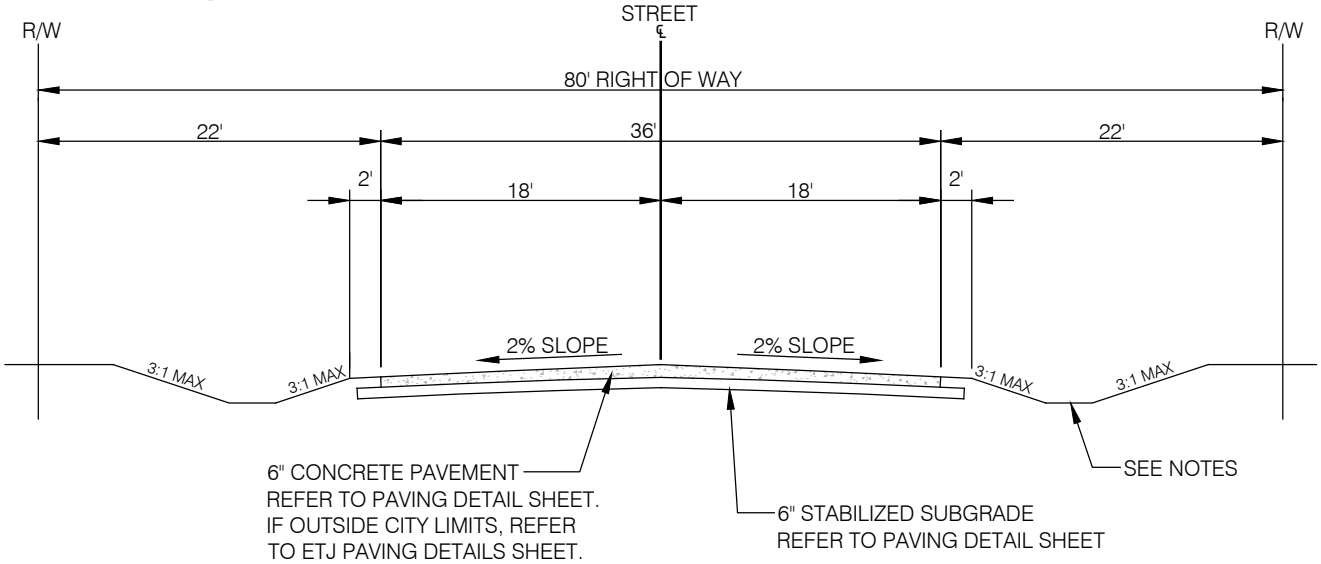

2 RURAL COLLECTOR SECTION

NOT TO SCALE

ROADSIDE DRAINAGE CHANNEL/DITCH NOTES:

1. TYPICAL DITCH SECTION - ACTUAL DRAINAGE CHANNEL DITCH SHALL BE DESIGNED TO MEET CURRENT CITY STORM WATER DESIGN MANUAL REQUIREMENTS.
2. ADDITIONAL RIGHT-OF-WAY AND/OR EASEMENTS MAY BE REQUIRED TO ACCOMMODATE DRAINAGE DITCH DESIGN.
3. DRAINAGE DITCH SIDE SLOPES SHALL NOT BE STEEPER THAN 3:1 WITHOUT SPECIAL CONSIDERATION. DITCHES PROPOSED STEEPER THAN 3:1 SHALL BE CONSTRUCTED FOR SLOPE STABILITY BASED ON A DESIGN AND GEOTECHNICAL REPORT PREPARED BY A PROFESSIONAL ENGINEER LICENSED IN THE STATE OF TEXAS.
4. DRAINAGE DITCHES SHALL BE FULLY STABILIZED WITH ALL PROPOSED DESIGN MEASURES, INCLUDING VEGETATION, PRIOR TO DEVELOPMENT ACCEPTANCE.
5. GRASS-LINED DRAINAGE DITCHES SHALL HAVE A MAXIMUM DESIGN VELOCITY OF 6.0 FEET PER SECOND (FT/S) AND A MINIMUM GRADE SLOPE OF 1.0 PERCENT.
6. DRAINAGE DITCHES DESIGNED WITH VELOCITIES EXCEEDING 6.0 FT/S SHALL REQUIRE EROSION CONTROL COUNTERMEASURES APPROVED BY TPW. MAXIMUM VELOCITY ALLOWED IS 10 FT/S.
7. DRIVEWAY DRAINAGE CULVERT SIZES, MATERIAL, AND PROPOSED END TREATMENTS SHALL BE REFERENCED ON THE DEVELOPMENT DRAINAGE PLAN FOR EACH LOT AND SUBMITTED FOR APPROVAL TO TPW. SAFETY END TREATMENTS OR CONCRETE HEADWALLS ARE REQUIRED BOTH UPSTREAM AND DOWNSTREAM OF ALL DRIVEWAY CULVERTS.
8. DRAINAGE CULVERTS UNDER ALL ROADWAYS SHALL BE CLASS III REINFORCED CONCRETE PIPE (RCP) OR CORRUGATED METAL PIPE (CMP) WITH CONCRETE HEADWALLS UPSTREAM AND DOWNSTREAM. CONCRETE RIP-RAP SHALL BE INSTALLED UPSTREAM OF THE DRAINAGE STRUCTURE. WHERE ADEQUATE COVER IS NOT AVAILABLE OVER PROPOSED RCP, CLASS IV RCP WILL BE REQUIRED FOR TPW APPROVAL.
9. ALL APPLICABLE TEMPORARY EROSION CONTROLS, TO INCLUDE SILT FENCE AND INLET PROTECTION, SHALL BE IN PLACE AS SHOWN IN APPROVED DESIGN DRAWINGS BEFORE CONSTRUCTION CAN COMMENCE.

	DATE	TRANSPORTATION AND PUBLIC WORKS DEPARTMENT	SHEET. #
1858 WEATHERFORD TRUE TEXAS	01/2020		C5
	DRAWN BY	RURAL ROAD SECTION RESIDENTIAL 1 ACRE LOT SUBDIVISION	
	CITY OF WEATHERFORD		

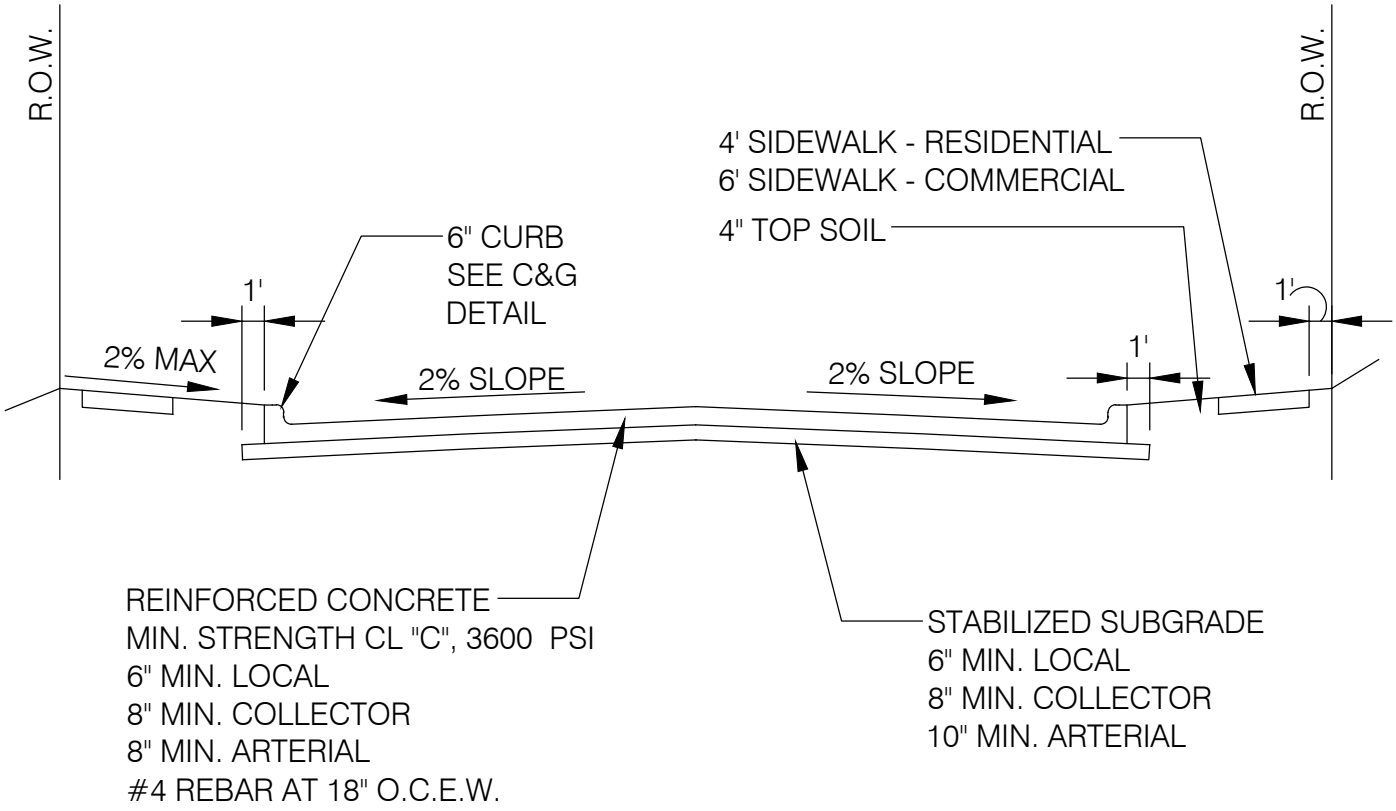

NOTES:

1. A GEOTECHNICAL REPORT SHALL BE PROVIDED FOR SUBGRADE DESIGN. THE GEOTECHNICAL REPORT SHALL BE A RECOMMENDATION ONLY TO DETERMINE IF ANY ADDITIONAL SOIL STABILIZATION IS REQUIRED. REGARDLESS OF THE PAVEMENT TYPE TO BE CONSTRUCTED, ALL SUBBASE MATERIALS SHALL BE MODIFIED BY EITHER LIME STABILIZATION OR CEMENT STABILIZATION PER MINIMUM REQUIREMENTS AS SPECIFIED. TPW SHALL MAKE THE FINAL DETERMINATION REGARDING SUBGRADE PREPARATION IF DIFFERENT SOIL CONDITIONS ARE DISCOVERED DURING CONSTRUCTION.
2. LIME STABILIZED SUBGRADE IS REQUIRED WHEN PI $\geq$ 15 AT 6% BY WEIGHT (27LBS/SY MIN.)
3. PORTLAND CEMENT STABILIZED SUBGRADE IS REQUIRED WHEN PI $<$ 15 AT 5% BY WEIGHT (26LBS/SY MIN.)
4. CONCRETE PAVEMENT SHALL BE MACHINE PLACED EITHER BY MECHANICAL VIBRATORY SCREED OR SLIP FORM PAVER UNLESS OTHERWISE APPROVED BY CITY.
5. REINFORCEMENT REBAR ON CONCRETE PAVEMENTS SHALL BE AMERICAN MADE.
6. ASPHALT PAVEMENTS ARE NOT ALLOWED UNLESS APPROVED BY CITY COUNCIL.
7. PAVEMENT IMPROVEMENTS ADJACENT TO EXISTING CITY STREETS MAY REQUIRE ALTERNATE PAVING DESIGN AS APPROVED BY DIRECTOR OF TRANSPORTATION AND PUBLIC WORKS. PAVEMENT IMPROVEMENTS ADJACENT TO CITY STREETS SHALL BE APPROVED BY TPW PRIOR TO CONSTRUCTION.
8. ALL CONSTRUCTION SHALL BE IN ACCORDANCE WITH THE STANDARD SPECIFICATIONS OF THE CITY OF WEATHERFORD AND THE LATEST EDITION OF THE "STANDARD SPECIFICATIONS FOR PUBLIC WORKS CONSTRUCTION NORTH CENTRAL TEXAS" HEREIN REFERRED TO AS "N.C.T.C.O.G."

1

TYPICAL PAVEMENT SECTION

NOT TO SCALE

	DATE	TRANSPORTATION AND PUBLIC WORKS DEPARTMENT	SHEET. #
WEATHERFORD 1858 TRUE TEXAS	01/2020		C6
	DRAWN BY	PAVEMENT DETAIL	
	CITY OF WEATHERFORD		

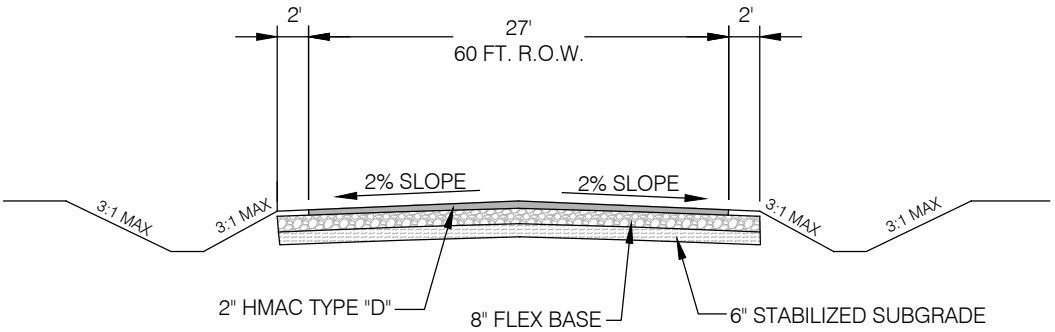

1 LOCAL - RURAL PAVEMENT DETAIL WITHIN E.T.J.

NOT TO SCALE

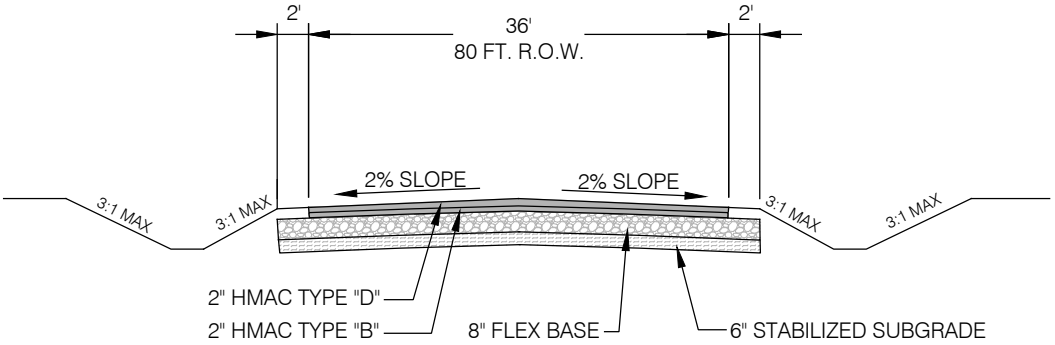

2 COLLECTOR - RURAL PAVEMENT DETAIL WITHIN E.T.J.

NOT TO SCALE

NOTES:

- A SOIL INVESTIGATION FOR SUBGRADE DESIGN SHALL BE CONDUCTED BY A GEOTECHNICAL ENGINEER TO DETERMINE IF ANY SOIL STABILIZATION IS REQUIRED.
- FOR DETAILS ON PLACEMENT OF ASPHALT PAVEMENT AND BASE COURSE REFER TO DIVISION 300 OF "STANDARD SPECIFICATIONS FOR PUBLIC WORKS CONSTRUCTION-NORTH CENTRAL TEXAS." LATEST EDITION.
- BASE COURSE SHALL BE COMPACTED TO 95% STANDARD PROCTOR WITH A MOISTURE CONTENT WITHIN MINUS 2 TO PLUS 4 PERCENT OPTIMUM REFER TO N.C.T.C.O.G.
- DEVELOPER SHALL SUBMIT COPIES OF SOIL REPORTS, COMPACTION REPORTS, AND INSPECTION REPORTS TO CITY INSPECTOR FOR REVIEW AND APPROVAL THROUGHOUT CONSTRUCTION. ALL REPORTS SHALL BE PERFORMED BY AN APPROVED LICENSED GEOTECHNICAL ENGINEER.
- ALL CONSTRUCTION SHALL BE IN ACCORDANCE WITH THE STANDARD SPECIFICATIONS OF THE CITY OF WEATHERFORD, AND LATEST EDITION OF THE "STANDARD SPECIFICATIONS FOR PUBLIC WORKS CONSTRUCTION-NORTH CENTRAL TEXAS" HEREIN REFERRED TO AS "N.C.T.C.O.G."
- REFER TO "RURAL ROAD SECTION" DETAIL SHEET FOR DRAINAGE CHANNEL/DITCH NOTES.

	DATE	TRANSPORTATION AND PUBLIC WORKS DEPARTMENT	SHEET. #
1858 WEATHERFORD TRUE TEXAS	01/2020		C7
	DRAWN BY	RURAL PAVEMENT DETAIL WITHIN EXTRA TERRITORIAL JURISDICTION (E.T.J.)	
	CITY OF WEATHERFORD		

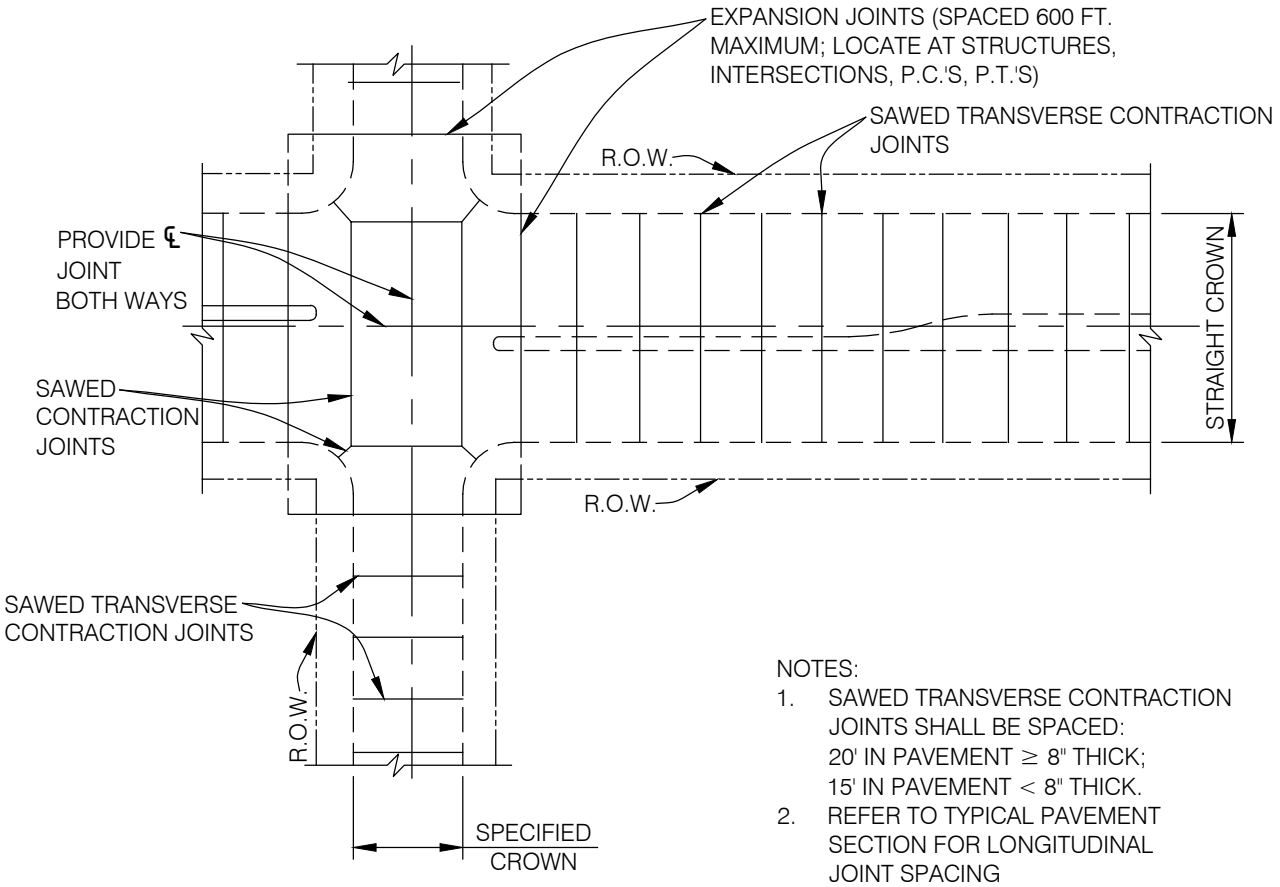

NOTES:

1. SAWED TRANSVERSE CONTRACTION JOINTS SHALL BE SPACED:
   20' IN PAVEMENT ≥ 8" THICK;
   15' IN PAVEMENT < 8" THICK.
2. REFER TO TYPICAL PAVEMENT SECTION FOR LONGITUDINAL JOINT SPACING

SPACING DIAGRAM FOR TRANSVERSE JOINTS

1

TRANSVERSE JOINTS

NOT TO SCALE

WEATHERFORD 1858 TRUE TEXAS	DATE 01/2020	TRANSPORTATION AND PUBLIC WORKS DEPARTMENT	SHEET. #
	DRAWN BY CITY OF WEATHERFORD	REINFORCED CONCRETE PAVEMENT TRANSVERSE JOINT SPACING	C8

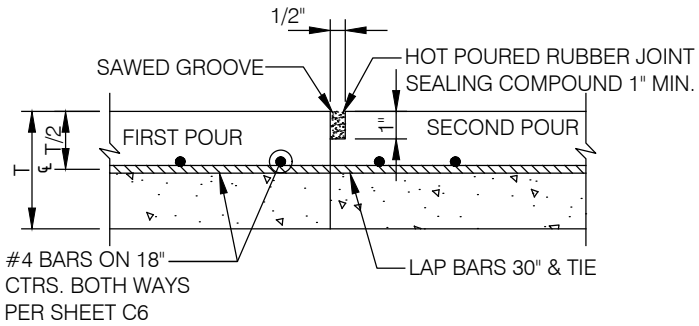

CONSTRUCTION JOINT

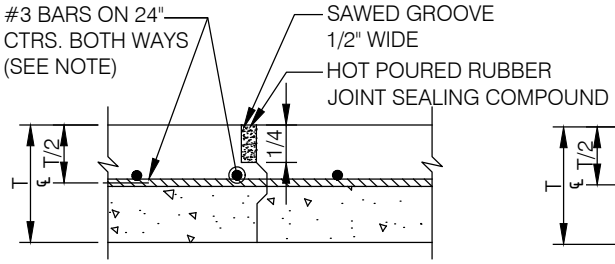

KEYED CONSTRUCTION JOINT

(FOR PAVEMENT THICKNESS > 6")

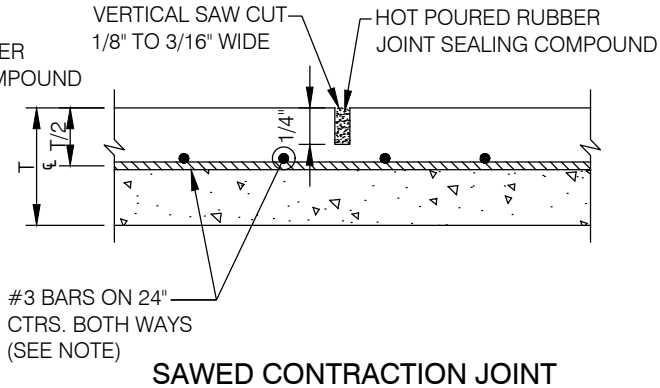

SAWED CONTRACTION JOINT

(REFER SHEET C8)

NOTE:
ALTERNATE REINFORCMENT
#4 BARS ON 18" CTRS.
BOTH WAYS. PER SHEET C6.

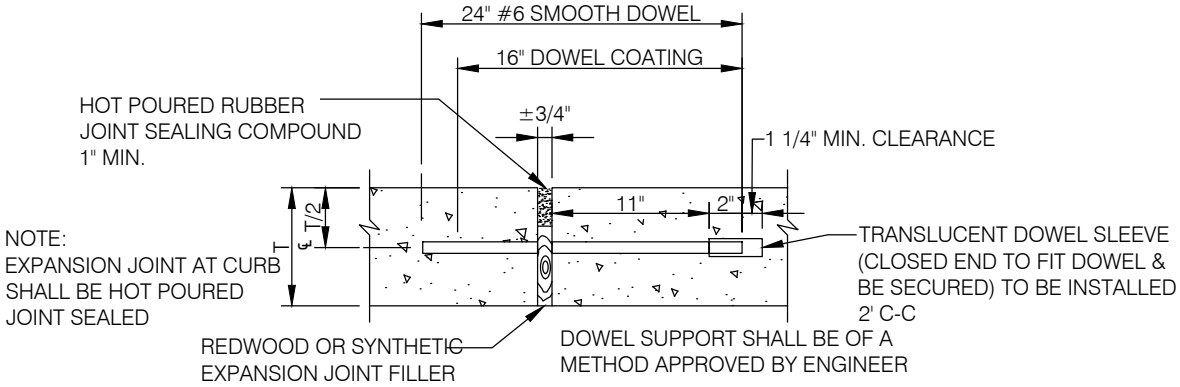

EXPANSION JOINT

(SPACED 600FT MAXIMUM; LOCATE AT STRUCTURES AND AT INTERSECTION P.C.'S & P.T.'S)

1

REINFORCED CONCRETE PAVEMENT JOINTS

NOT TO SCALE

	DATE	TRANSPORTATION AND PUBLIC WORKS DEPARTMENT	SHEET. #
WEATHERFORD 1858 TRUE TEXAS	01/2020		C9
	DRAWN BY	REINFORCED CONCRETE PAVEMENT JOINTS	
	CITY OF WEATHERFORD		

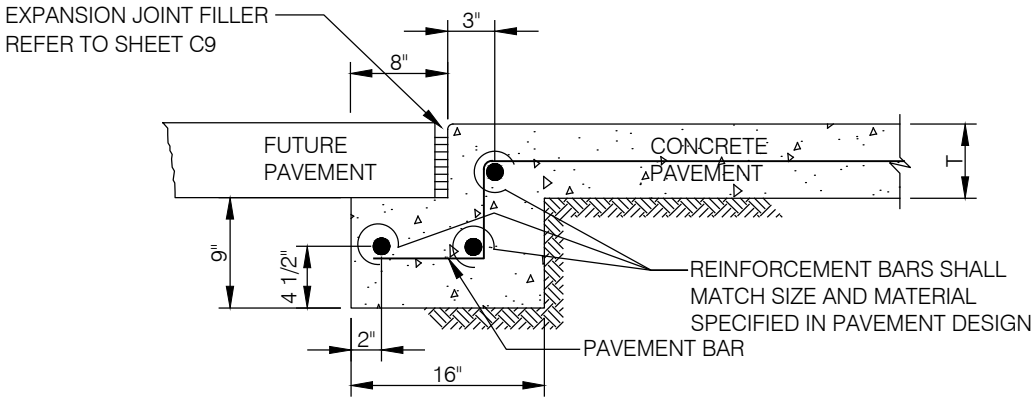

STREET HEADER FOR FUTURE PAVEMENT

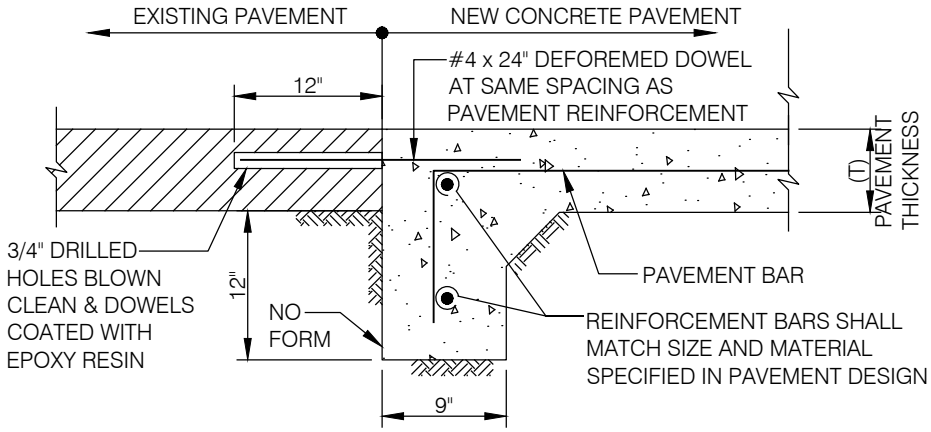

STREET HEADER AT EXISTING PAVEMENT

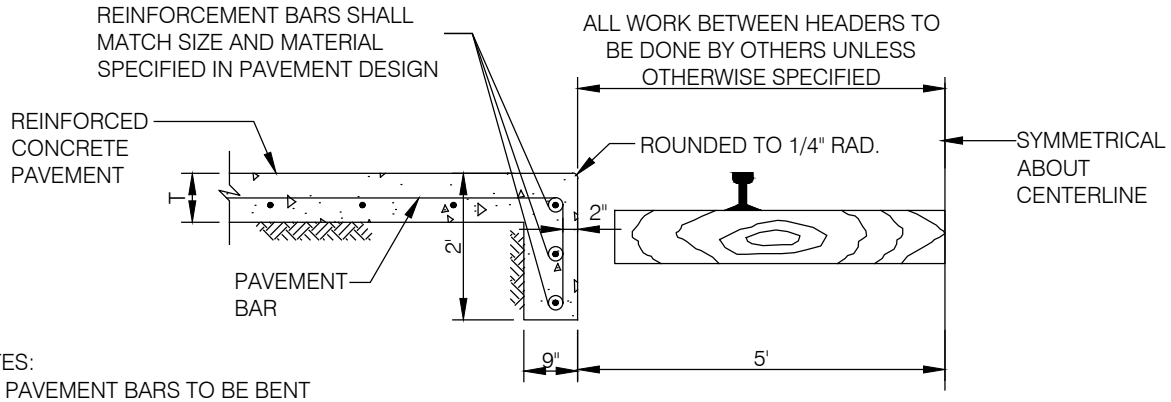

NOTES:
1. PAVEMENT BARS TO BE BENT DOWN INTO HEADER.
2. HEADER AND PAVEMENT TO BE MONOLITHIC.

STREET HEADER AT RAILROAD

1 STREET HEADERS

NOT TO SCALE

	DATE	TRANSPORTATION AND PUBLIC WORKS DEPARTMENT	SHEET. #
WEATHERFORD 1858 TRUE TEXAS	01/2020		C10
	DRAWN BY	REINFORCED CONCRETE STREET HEADERS	
	CITY OF WEATHERFORD		

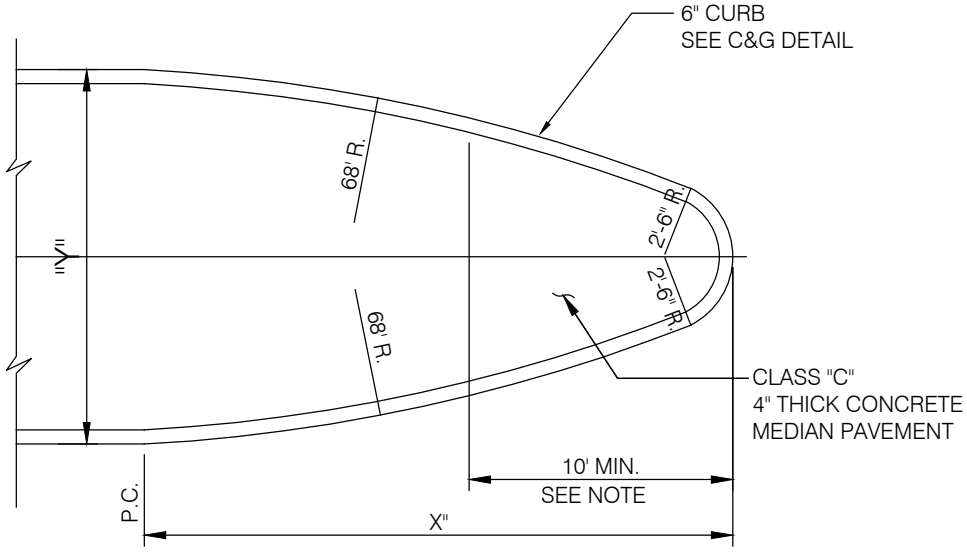

DIMENSIONS OF MEDIAN NOSE

Y = 14'	X = 26.3'
Y = 15'	X = 27.6'
Y = 16'	X = 28.8'
Y = 17'	X = 29.9'

CONCRETE NOSE FOR MEDIAN ISLAND

NOTE:
MEDIAN PAVING SHALL EXTEND TO POINT WHERE MEDIAN IS 6' WIDE. IF MEDIAN IS 6' WIDE. PAVING SHALL EXTEND 15' FROM NOSE. FOR MEDIANS WIDER THAN 6' PAVING SHALL EXTEND 10' FROM NOSE. ALL DISTANCES ARE MINIMUM.

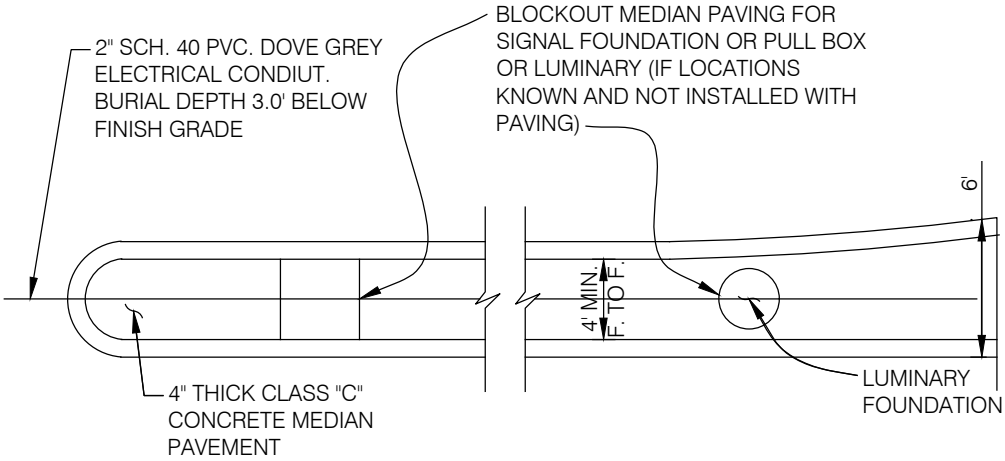

LEFT TURN LANE MEDIAN PAVMENT

1 MEDIAN ISLAND PAVEMENT

NOT TO SCALE

	DATE	TRANSPORTATION AND PUBLIC WORKS DEPARTMENT	SHEET. #
WEATHERFORD 1858 TRUE TEXAS	01/2020		C11
	DRAWN BY	MEDIAN ISLAND PAVEMENT	
	CITY OF WEATHERFORD		

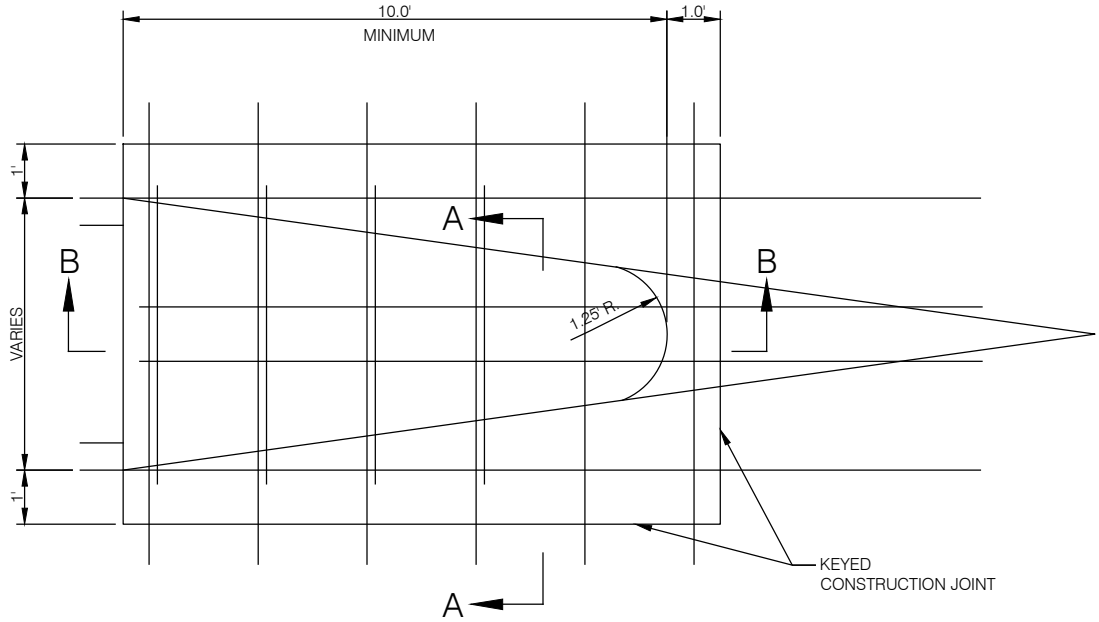

1 MONOLITHIC CONCRETE MEDIAN NOSE

NOT TO SCALE

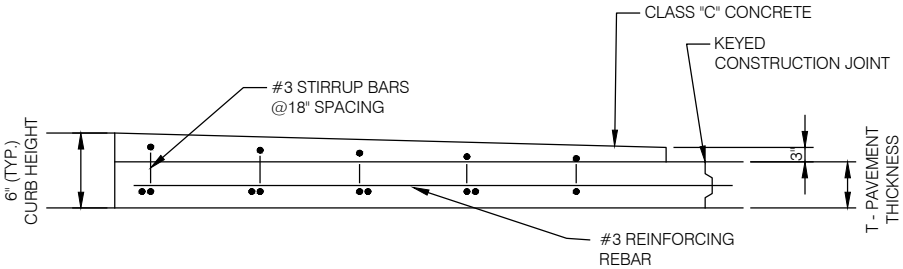

2 SECTION B-B

NOT TO SCALE

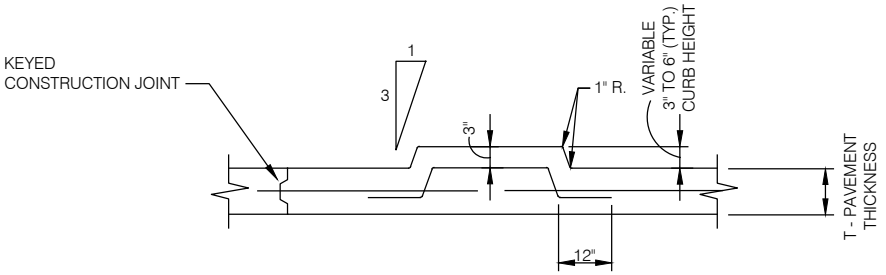

3 SECTION A-A

NOT TO SCALE

NOTE:
1. REINFORCEMENT BARS SHALL MATCH SIZE AND MATERIAL SPECIFIED IN PAVEMENT DESIGN.

	DATE	TRANSPORTATION AND PUBLIC WORKS DEPARTMENT	SHEET. #
WEATHERFORD 1858 TRUE TEXAS	01/2020		C12
	DRAWN BY	MEDIAN ISLAND PAVEMENT MONOLITHIC CONCRETE NOSE	
	CITY OF WEATHERFORD		

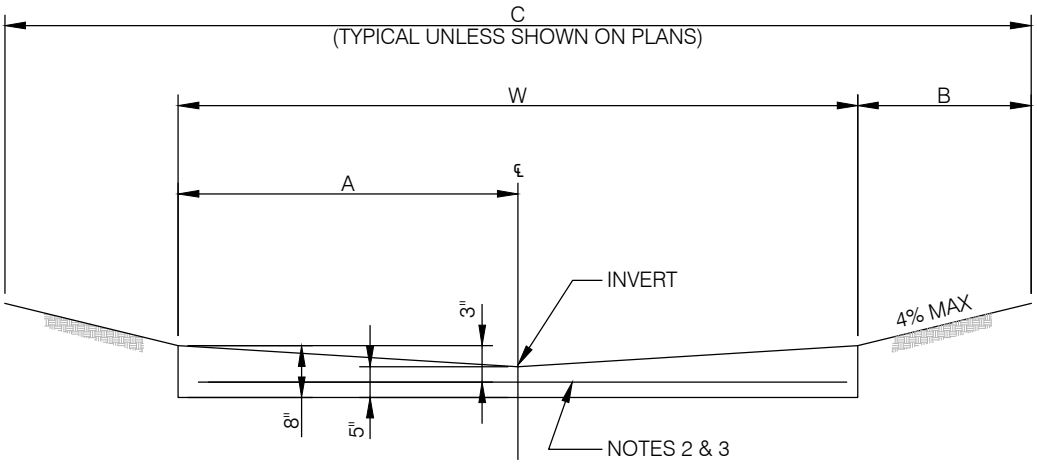

ALLEY SECTION WITHOUT CURB

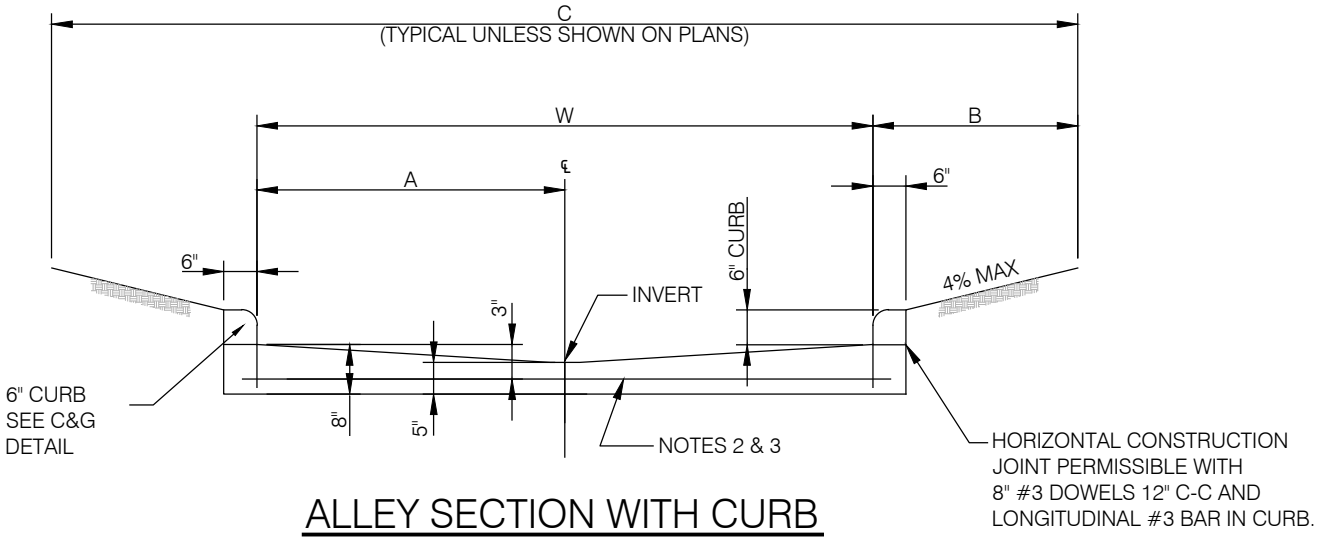

ALLEY SECTION WITH CURB

NOTES:

1. PROVIDE SAWED TRANSVERSE CONTRACTION JOINTS NOT MORE THAN 20' C-C.
2. REINFORCED WITH NO. 3 BARS AT 18" C-C BOTH WAYS.
3. EXPANSION JOINTS TO BE PLACED AT ALL INTERSECTIONS AND NOT TO EXCEED 600' BETWEEN JOINTS.
4. CONCRETE SHALL BE 5" THICK CLASS "C", 3600 PSI
5. COMPACTED SUBGRADE TO 95% STANDARD PROCTOR WITH PI < 20.

ALLEY WIDTH (W)	A	B	R.O.W. WIDTH (C)
10'	5'	2'-6"	15'
15'	7.5'	2'-6"	20'

1 ALLEY SECTION

NOT TO SCALE

	DATE	TRANSPORTATION AND PUBLIC WORKS DEPARTMENT	SHEET. #
WEATHERFORD 1858 TRUE TEXAS	01/2020		C13
	DRAWN BY	ALLEY SECTION WITH AND WITHOUT CURB	
	CITY OF WEATHERFORD		

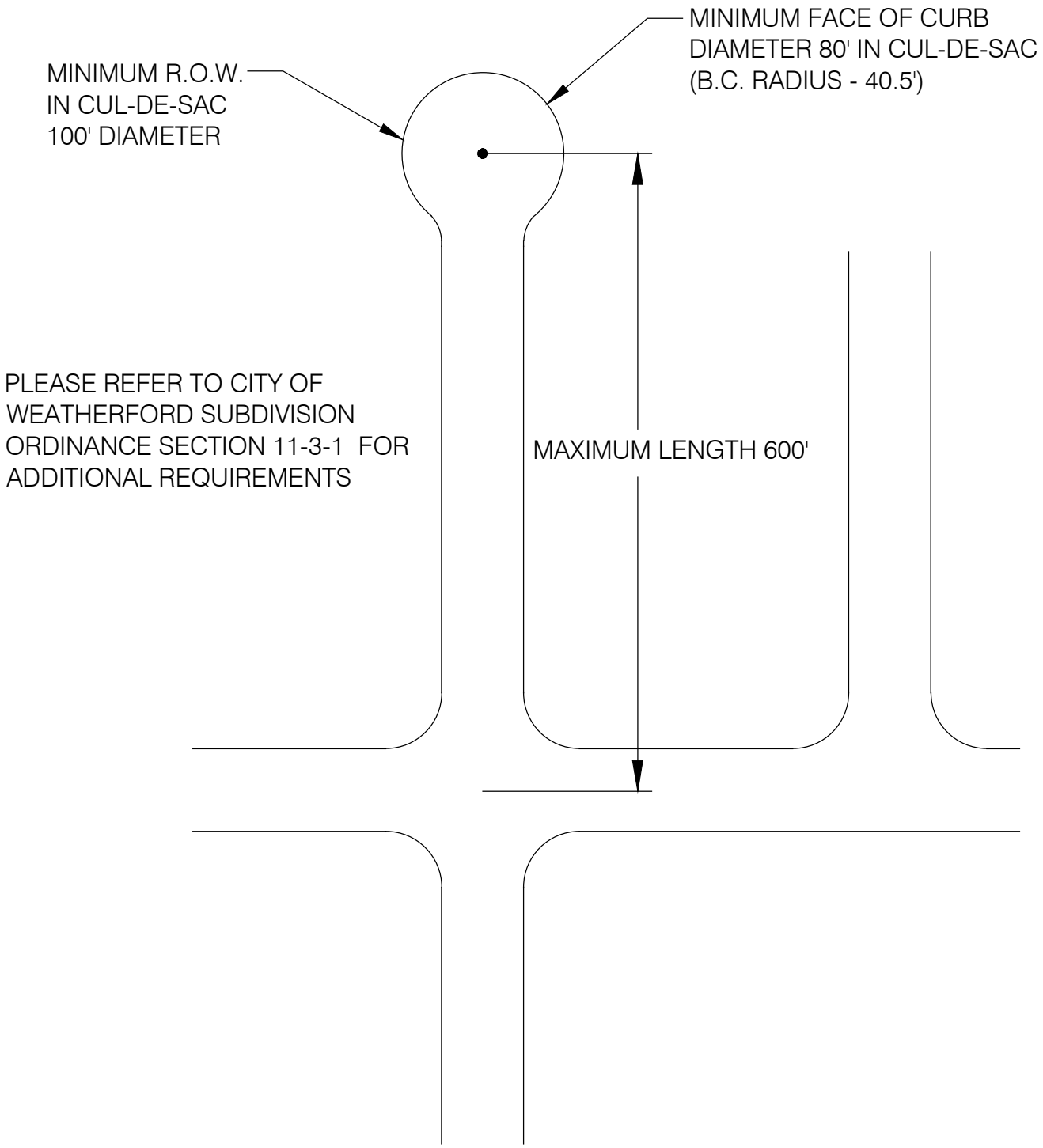

1 RESIDENTIAL CUL-DE-SAC

NOT TO SCALE

WEATHERFORD 1858 TRUE TEXAS	DATE 01/2020	TRANSPORTATION AND PUBLIC WORKS DEPARTMENT	SHEET. #
	DRAWN BY CITY OF WEATHERFORD	TYPICAL RESIDENTIAL CUL-DE-SAC	C14

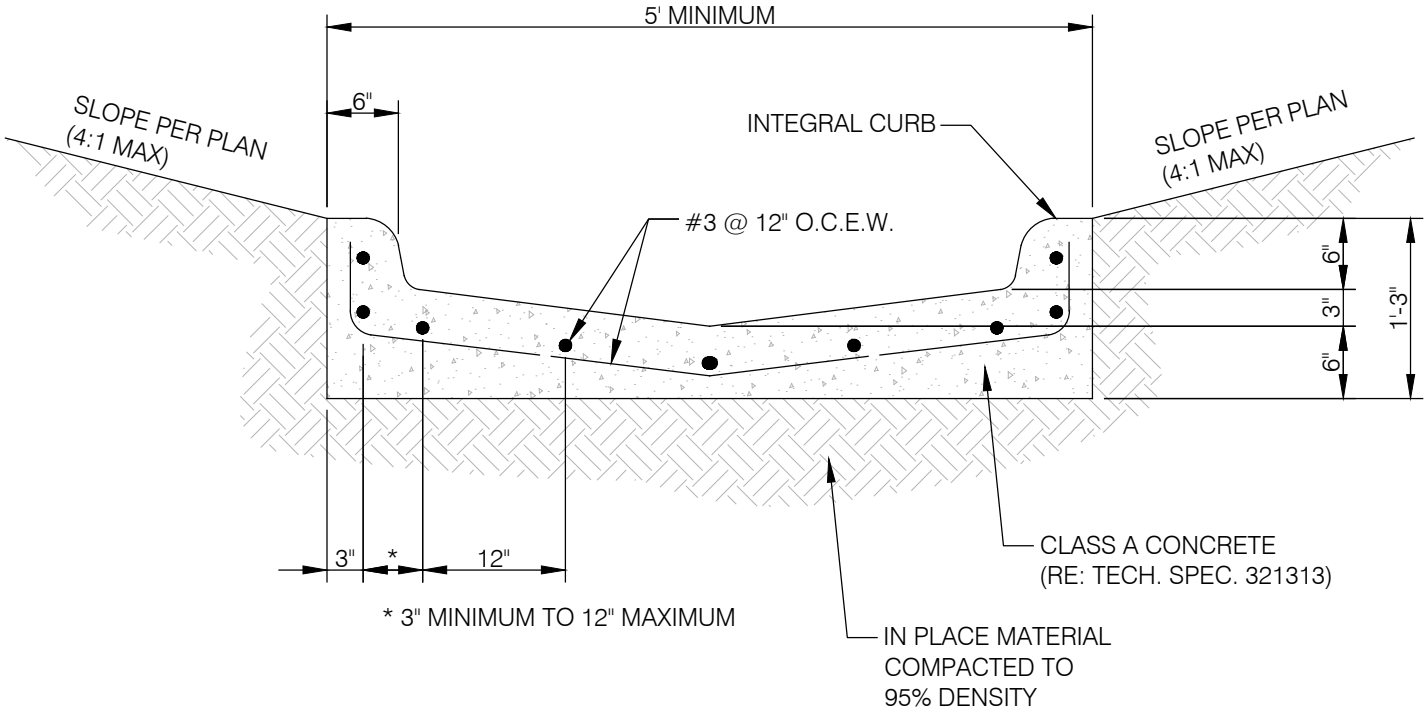

1 CURBED FLUME

NOT TO SCALE

NOTES:

1. IF FLUME IS 7' OR WIDER, INSTALL REMOVABLE STEEL BOLLARDS BURIED TO 4'-0" DEPTH AT BOTH START AND END OF FLUME AT 5' SPACING. CONTACT TPW FOR ADDITIONAL INFORMATION AND DETAILS ON BOLLARDS.
2. SLOPES SHALL BE STABILIZED WITH VEGETATION OR OTHER APPROVED METHODS.

	DATE	TRANSPORTATION AND PUBLIC WORKS DEPARTMENT	SHEET. #
WEATHERFORD 1858 TRUE TEXAS	01/2020		C15
	DRAWN BY	CURBED FLUME DETAIL	
	CITY OF WEATHERFORD		

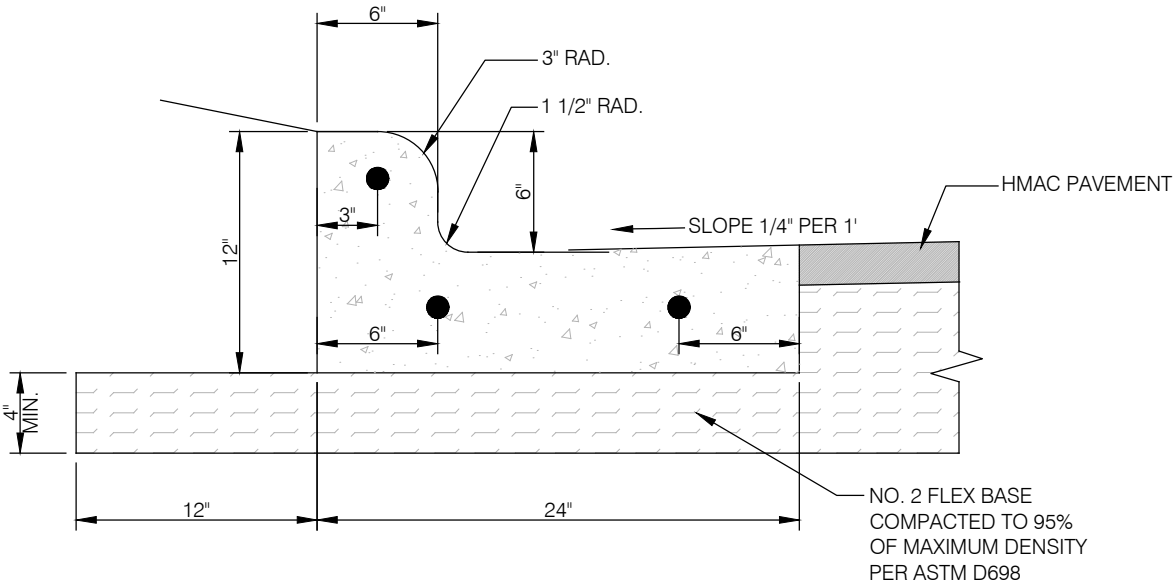

1 SEPARATE CURB AND GUTTER

NOT TO SCALE

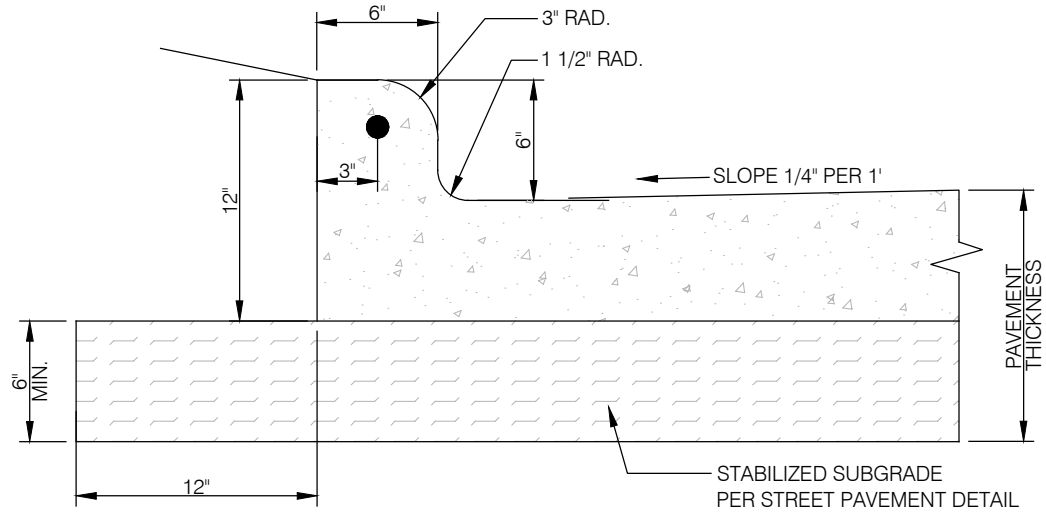

2 INTEGRAL CURB AND GUTTER

NOT TO SCALE

NOTES:

1. REINFORCEMENT SHALL BE NO. 4 BARS, UNLESS OTHERWISE SPECIFIED.
2. CONCRETE SHALL BE CLASS "C", 3600 PSI MINIMUM. ALL CURBS ARE CONSTRUCTED OF PORTLAND CEMENT CONCRETE UNLESS OTHERWISE SHOWN.
3. FOR SEPERATE C&G CONTRACTOR SHALL PLACE EXPANSION JOINTS EVERY 60 FT. AND CONSTRUCT TOOL JOINT SPACING AT 10' INTERVALS UNLESS OTHERWISE SPECIFIED BY INSPECTOR.
4. FOR INTEGRAL C&G CONTRACTOR SHALL PLACE EXPANSION JOINTS AND TOOL JOINTS PER STREET PAVEMENT DETAIL OR AS SPECIFIED BY INSPECTOR.
5. GRADE SHALL BE MEASURED AT BACK OF CURB AND TOP OF CURB.

	DATE	TRANSPORTATION AND PUBLIC WORKS DEPARTMENT	SHEET. #
1858 WEATHERFORD TRUE TEXAS	01/2020		C16
	DRAWN BY	CONCRETE CURB AND GUTTER	
	CITY OF WEATHERFORD		

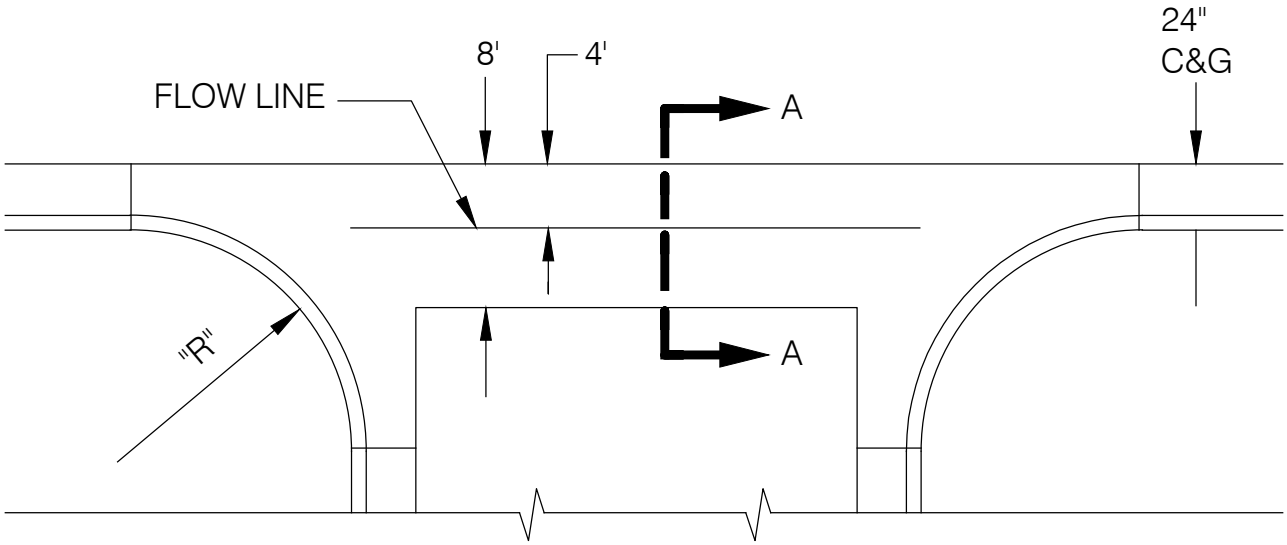

1 VALLEY GUTTER

NOT TO SCALE

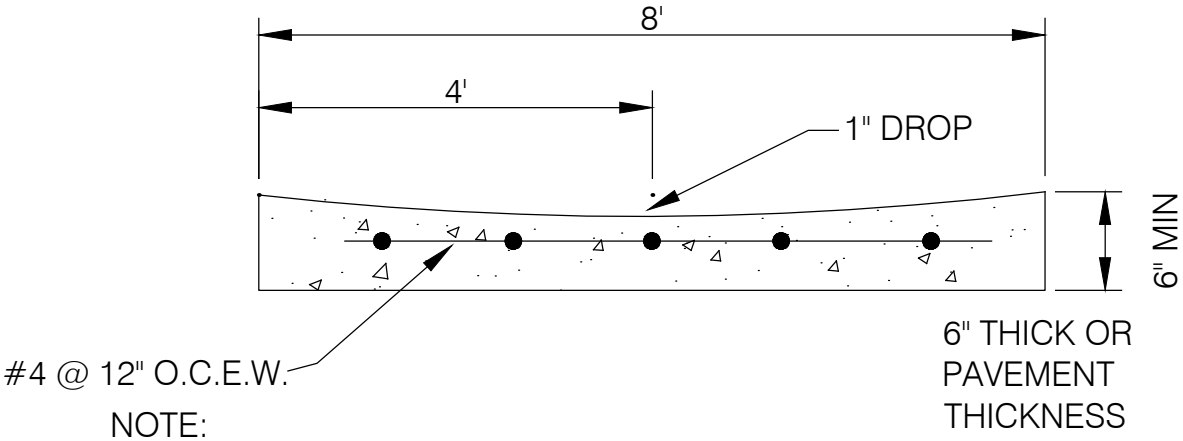

NOTE:
ALL CONCRETE FOR VALLEY GUTTER SHALL BE CLASS "A"
REINFORCEMENT STEEL SHALL BE NO.4 ON 12" CENTERS BOTH WAYS.

2 SECTION A-A

NOT TO SCALE

	DATE	TRANSPORTATION AND PUBLIC WORKS DEPARTMENT	SHEET. #
WEATHERFORD 1858 TRUE TEXAS	01/2020		C17
	DRAWN BY	VALLEY GUTTER	
	CITY OF WEATHERFORD		

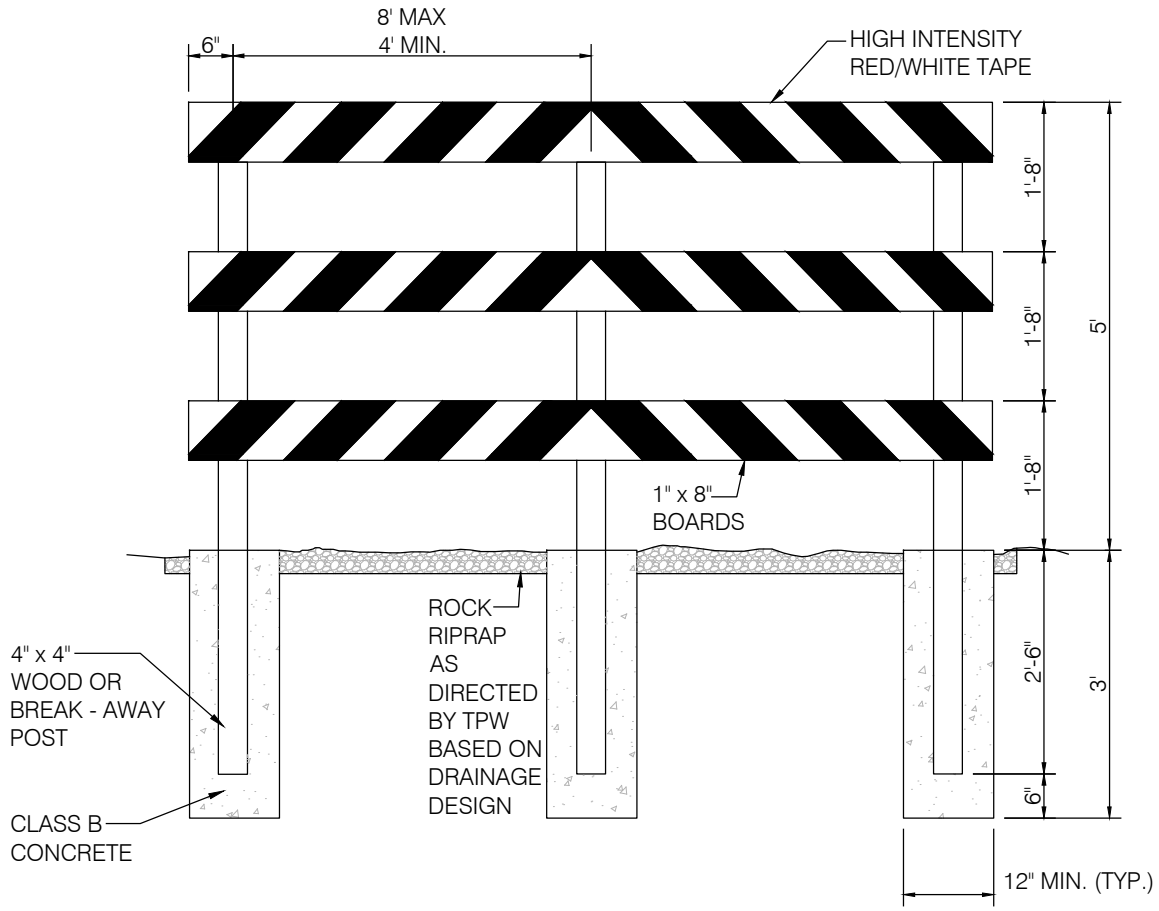

TYPICAL INSTALLATION

NOTE:

1. ALL BARRICADES SHALL BE IN ACCORDANCE WITH THE LATEST REVISION OF THE TEXAS MANUAL ON UNIFORM TRAFFIC CONTROL DEVICES (TMUTCD) AND THE STANDARD HIGHWAY SIGN DESIGNS FOR TEXAS (SHSD).
2. BARRICADE MUST COVER ENTIRE WIDTH OF PAVED ROADWAY OR FIRELANE SURFACE.
3. ALL 1" x 8" AND 4" x 4" WOOD POSTS MUST BE PAINTED WHITE.
4. BARRICADES SHALL BE DESIGNED AND CONSTRUCTED TO THE STANDARDS OF THE COMPLIANT WORK ZONE TRAFFIC CONTROL DEVICE LIST.
5. BARRICADE STRIPING MATERIAL SHALL BE RED AND WHITE HIGH INTENSITY REFLECTIVE SHEETING.
6. DIAGONAL STRIPING SHALL BE PLACED IN A MANNER THAT DIRECTS TRAFFIC IN THE APPROPRIATE DIRECTION OF TRAVEL.
7. PROPOSED BARRICADE STRIPING SHALL BE APPROVED BY THE CITY PRIOR TO PLACEMENT OF BARRICADE

1

ROAD CLOSED BARRICADE

NOT TO SCALE

WEATHERFORD 1858 TRUE TEXAS	DATE 01/2020	TRANSPORTATION AND PUBLIC WORKS DEPARTMENT	SHEET. #
	DRAWN BY CITY OF WEATHERFORD	ROAD CLOSED BARRICADE TYPICAL INSTALLATION	C18

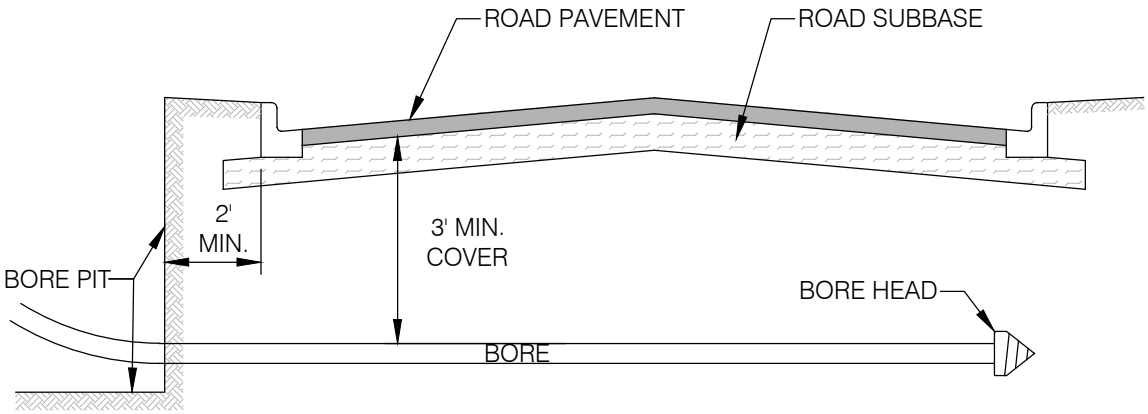

1 JACK & BORE DETAILS

NOT TO SCALE

NOTES:

1. A RIGHT-OF-WAY EXCAVATION PERMIT IS REQUIRED WHEN JACKING OR BORING WITHIN CITY RIGHT-OF-WAY. PERMIT APPLICATION AVAILABLE THROUGH TPW DEPARTMENT.
2. WHEN CONSTRUCTION IS WITHIN TXDOT RIGHT-OF-WAY JURISDICTION, A TXDOT PERMIT IS REQUIRED.
3. ALL CONSTRUCTION METHODS FOR JACKING & BORING SHALL CONFORM TO ITEM 503.1 THROUGH 503.4 OF N.C.T.C.O.G. STANDARD SPECIFICATIONS FOR PUBLIC WORKS CONSTRUCTION, 4TH EDITION.
4. WHEN CONSTRUCTION ACTIVITY IS COMPLETED, THE CONTRACTOR SHOULD BACKFILL ALL BORE PITS TO 90% OF MAXIMUM DENSITY AND REPLACE, IF ANY, SURFACE VEGETATION TO THE SAME OR BETTER CONDITION PRIOR TO CONSTRUCTION.
5. CHECK WITH TPW DEPARTMENT FOR SPECIFIC REQUIREMENTS NOT CONTAINED HEREIN.

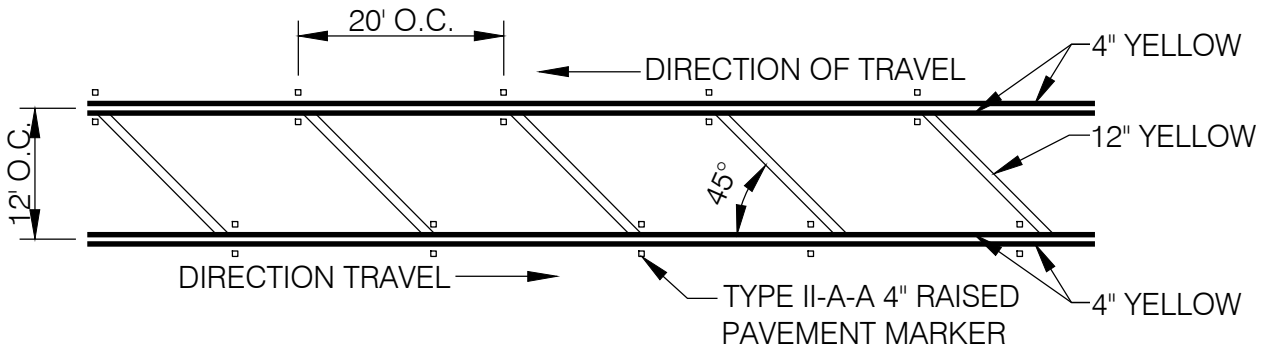

OPPOSING TRAFFIC GORE DETAIL

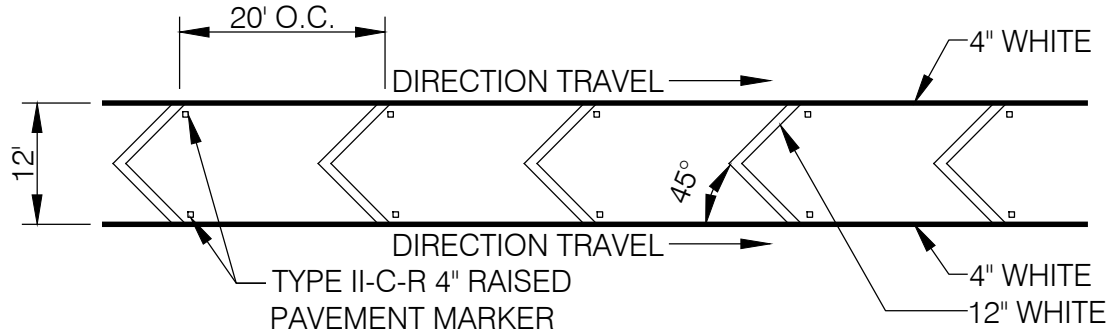

OPPOSING TRAFFIC GORE DETAIL

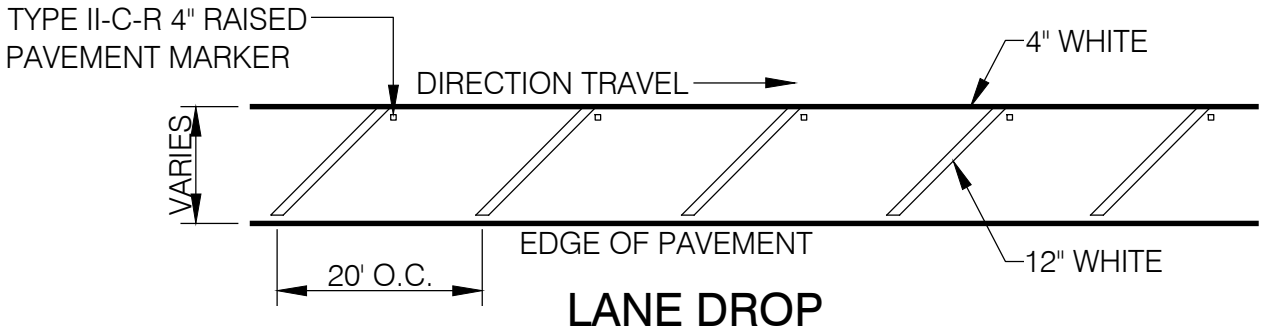

LANE DROP

NOTES:

1. REFER TO TxDOT PM(4)-03 DETAIL "A" FOR DIMENSION BETWEEN PAVEMENT MARKINGS AND MARKERS.
2. REFER TO N.C.T.C.O.G. SPECIFICATIONS AND TXMUTCD.
3. ALL PAVEMENT MARKINGS SHALL BE THERMOPLASTIC (TXDOT TYP I).

1

PAVEMENT MARKINGS AND DETAILS

NOT TO SCALE

WEATHERFORD 1858 TRUE TEXAS	DATE 01/2020	TRANSPORTATION AND PUBLIC WORKS DEPARTMENT	SHEET. #
	DRAWN BY CITY OF WEATHERFORD	PAVEMENT MARKINGS DETAIL	C20

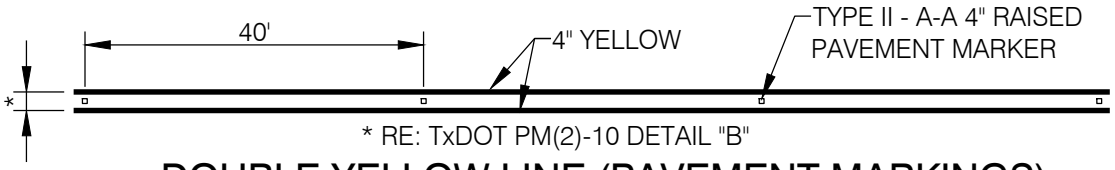

* RE: TxDOT PM(2)-10 DETAIL "B"

DOUBLE YELLOW LINE (PAVEMENT MARKINGS)

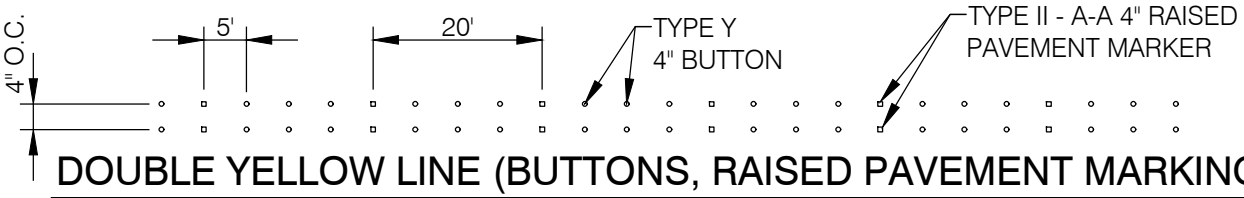

DOUBLE YELLOW LINE (BUTTONS, RAISED PAVEMENT MARKINGS)

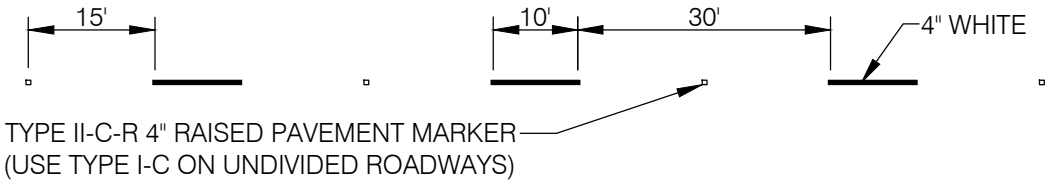

BROKEN WHITE LANE LINE

WHITE OR YELLOW EDGE LINE

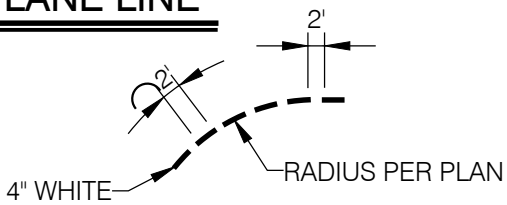

LEFT TURN "PUPPY TRACKS"

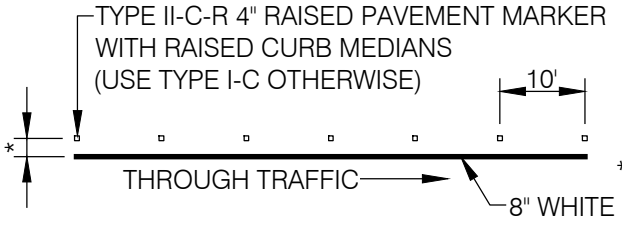

* RE: TxDOT PM(4)-03 DETAIL "C"

LEFT TURN BAY LINE

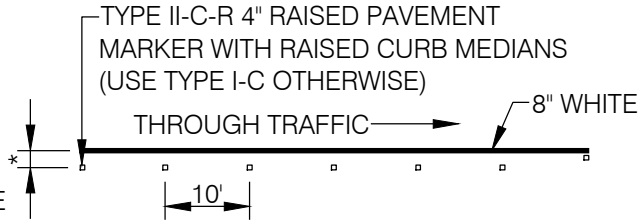

* RE: TxDOT PM(4)-03 DETAIL "C"

RIGHT TURN BAY LINE

NOTES:

1. ALL STRIPING, ARROWS AND WORDS ON PAVEMENT SHALL BE THERMOPLASTIC UNLESS NOTED OTHERWISE NOTED IN PLANS.
2. REFER TO N.C.T.C.O.G. SPECIFICATIONS AND TXMUTCD

1 PAVEMENT MARKINGS AND DETAILS

NOT TO SCALE

	DATE	TRANSPORTATION AND PUBLIC WORKS DEPARTMENT	SHEET. #
WEATHERFORD 1858 TRUE TEXAS	01/2020		C21
	DRAWN BY	PAVEMENT MARKINGS DETAIL	
	CITY OF WEATHERFORD		

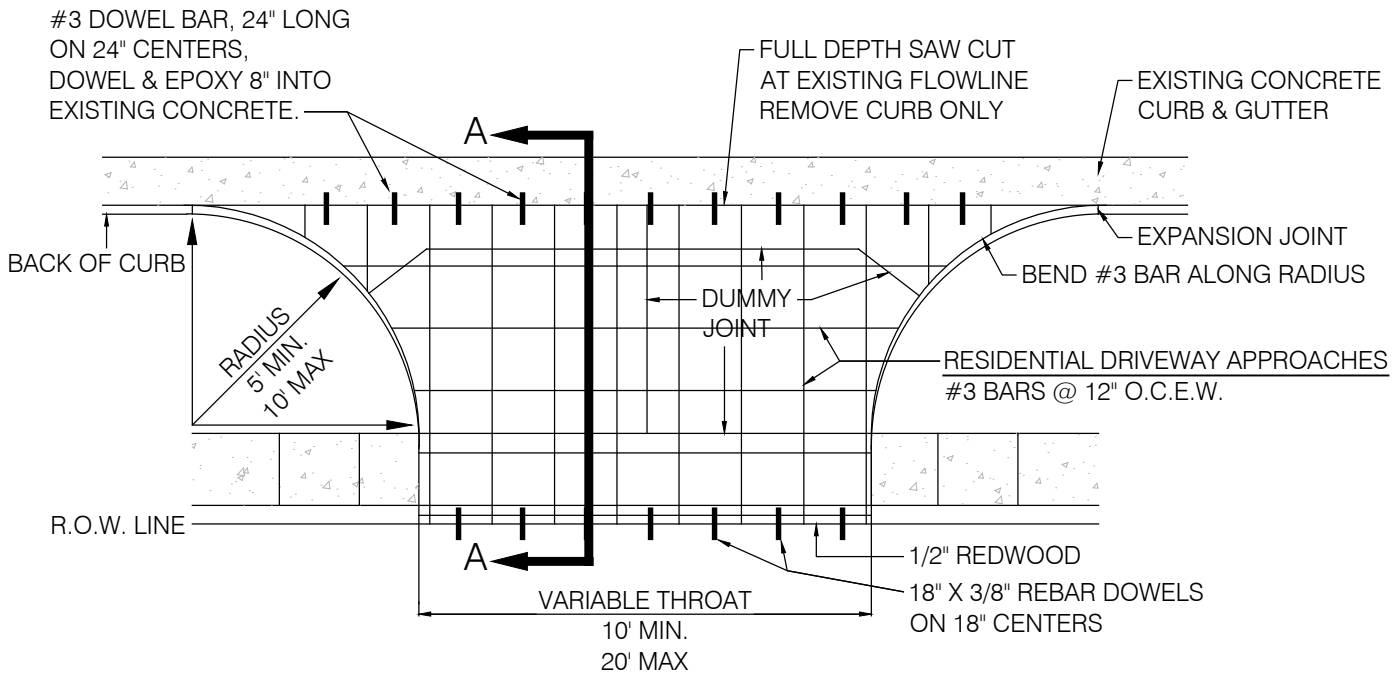

SECTION A-A

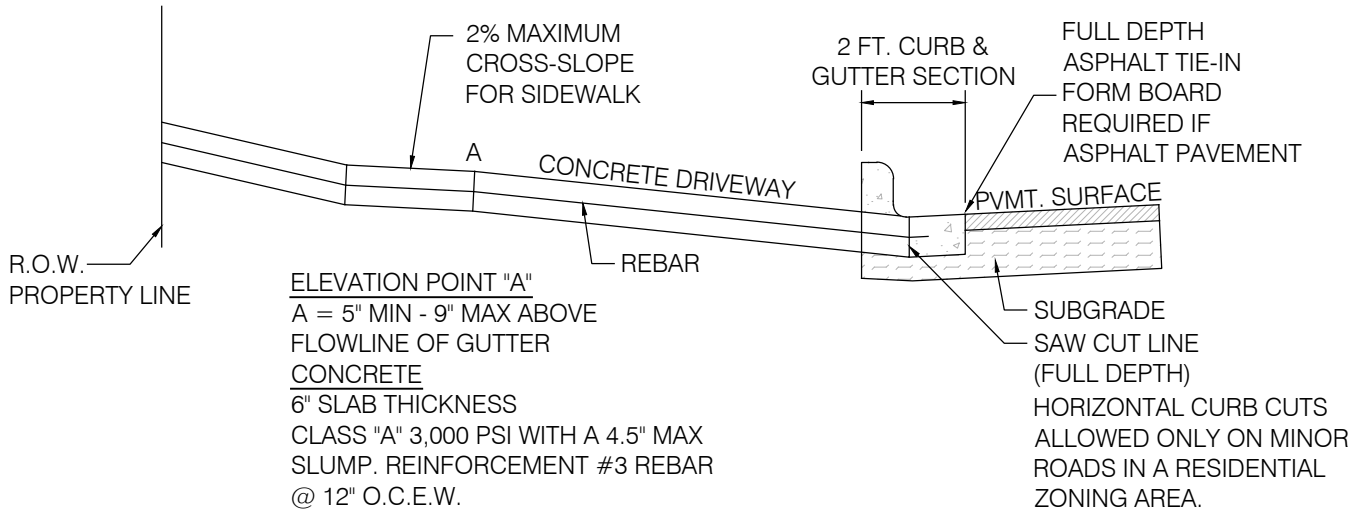

NOTES:

1. ABOVE GROUND PUBLIC UTILITY STRUCTURES SHALL BE A MINIMUM DISTANCE OF 4 FEET FROM THE DRIVEWAY APPROACH RADIUS.
2. SEE TABLE 6-4 FOR DRIVEWAY SPACING AND DESIGN STANDARDS.
3. DRIVEWAY EXCAVATION WITHIN R.O.W. SHALL NOT BE LEFT OPEN CUT FOR OVER 72 HOURS.
4. A DRIVEWAY APPROACH PERMIT IS REQUIRED PRIOR TO ANY CONSTRUCTION WITHIN CITY RIGHT OF WAY.

	DATE	TRANSPORTATION AND PUBLIC WORKS DEPARTMENT	SHEET. #
1858 WEATHERFORD TRUE TEXAS	01/2020		C22
	DRAWN BY	RESIDENTIAL DRIVEWAY APPROACH	
	CITY OF WEATHERFORD		

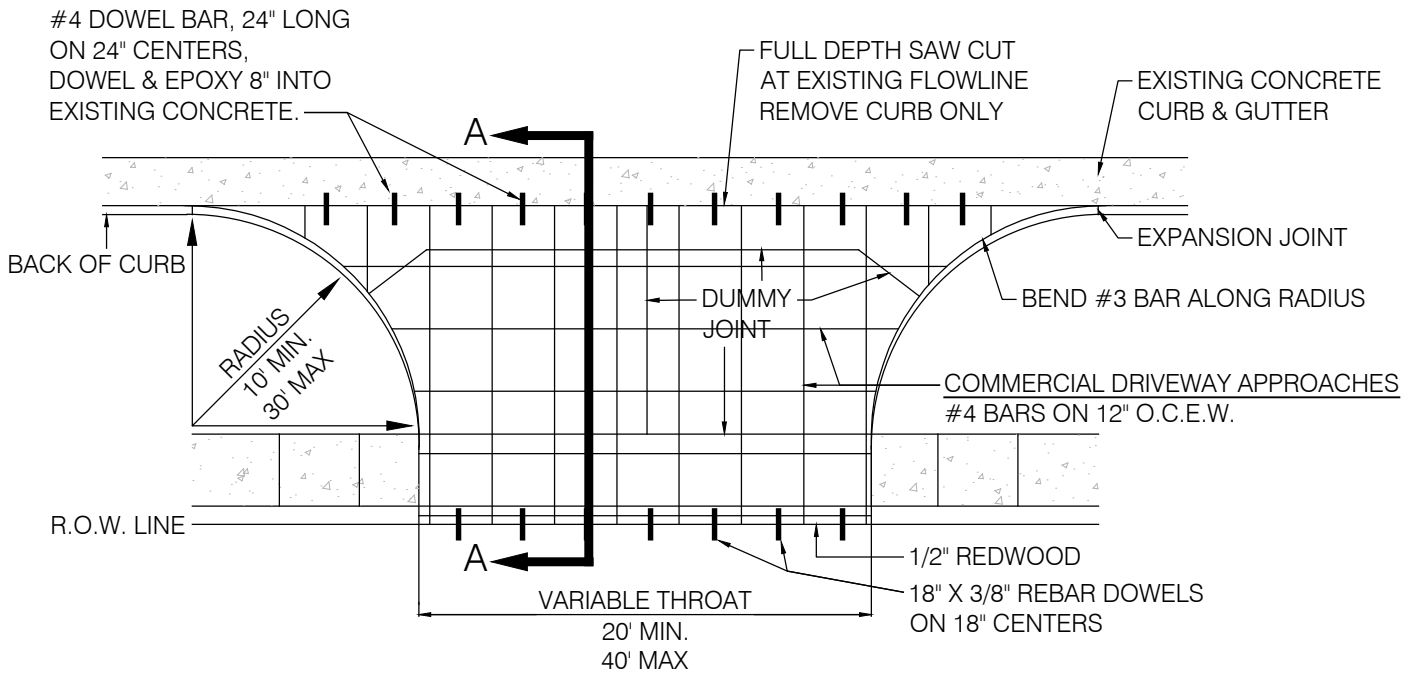

SECTION A-A

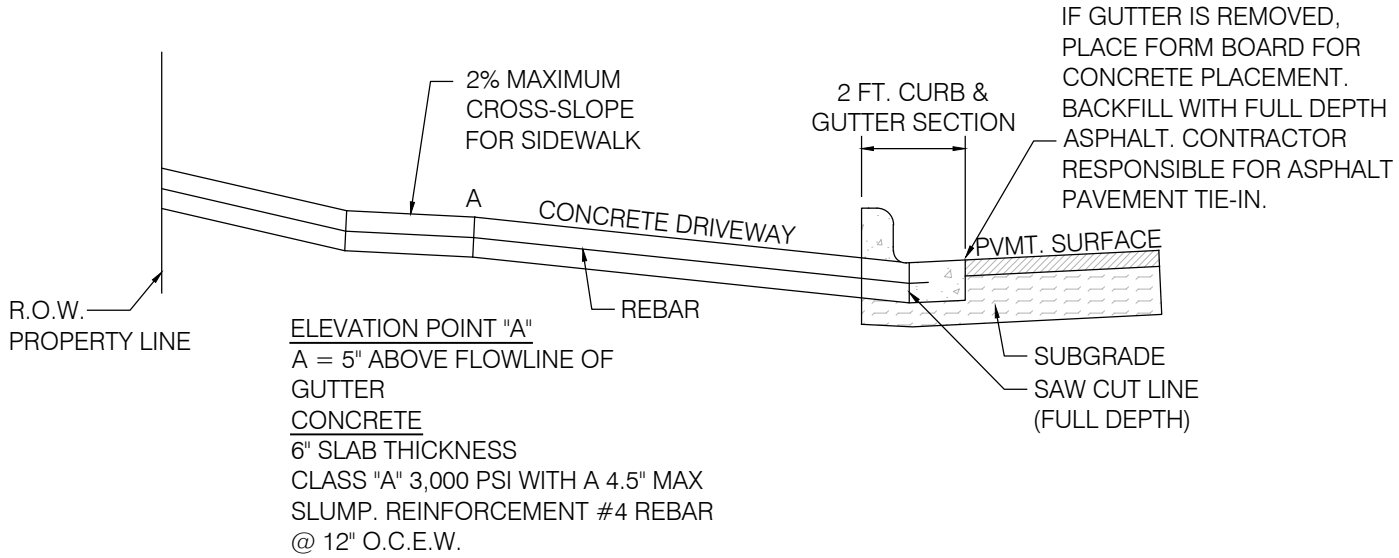

ELEVATION POINT "A"
A = 5" ABOVE FLOWLINE OF GUTTER

CONCRETE
6" SLAB THICKNESS
CLASS "A" 3,000 PSI WITH A 4.5" MAX SLUMP. REINFORCEMENT #4 REBAR @ 12" O.C.E.W.

NOTES:

1. ABOVE GROUND PUBLIC UTILITY STRUCTURES SHALL BE A MINIMUM DISTANCE OF 4 FEET FROM THE DRIVEWAY APPROACH RADIUS.
2. SEE TABLE 6-4 FOR DRIVEWAY SPACING AND DESIGN STANDARDS.
3. DRIVEWAY EXCAVATION WITHIN R.O.W. SHALL NOT BE LEFT OPEN CUT FOR OVER 72 HOURS.
4. A DRIVEWAY APPROACH PERMIT IS REQUIRED PRIOR TO ANY CONSTRUCTION WITHIN CITY RIGHT OF WAY.

	DATE	TRANSPORTATION AND PUBLIC WORKS DEPARTMENT	SHEET. #
1858 WEATHERFORD TRUE TEXAS	01/2020		C23
	DRAWN BY	COMMERCIAL DRIVEWAY APPROACH	
	CITY OF WEATHERFORD		

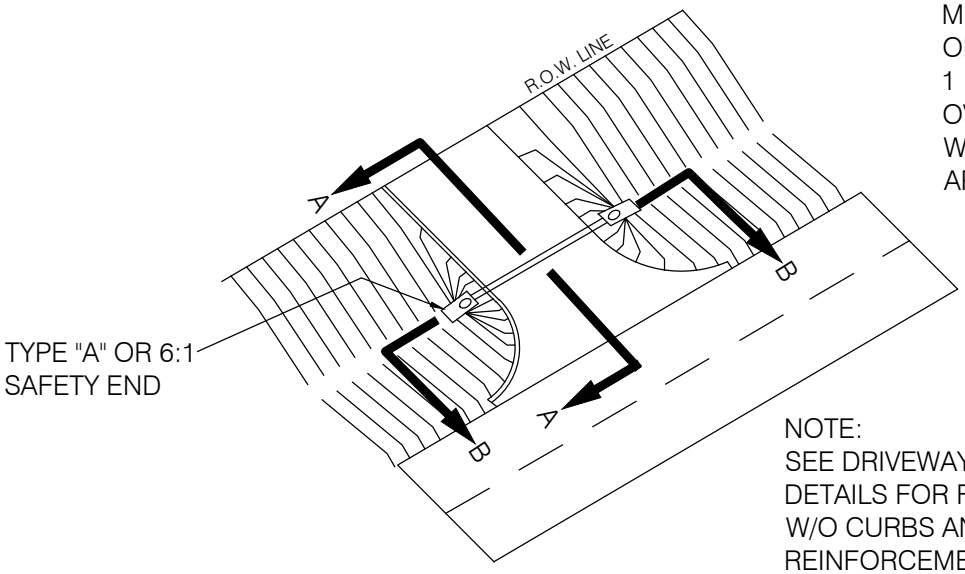

6" CLASS "A" CONCRETE
MINIMUM 3000 PSI
OR
1 1/2" HMAC
OVER 4" ROAD BASE
WITH CITY OF WEATHERFORD
APPROVAL

NOTE:
SEE DRIVEWAY APPROACH
DETAILS FOR FLAT DRIVEWAY
W/O CURBS AND STEEL
REINFORCEMENT LAYOUT

1 STANDARD DRIVEWAY APPROACH W/CULVERT

NOT TO SCALE

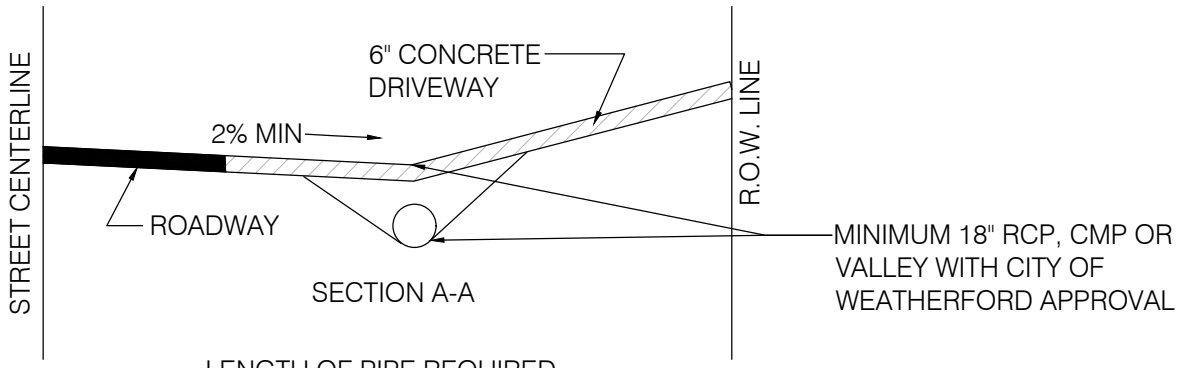

SECTION A-A

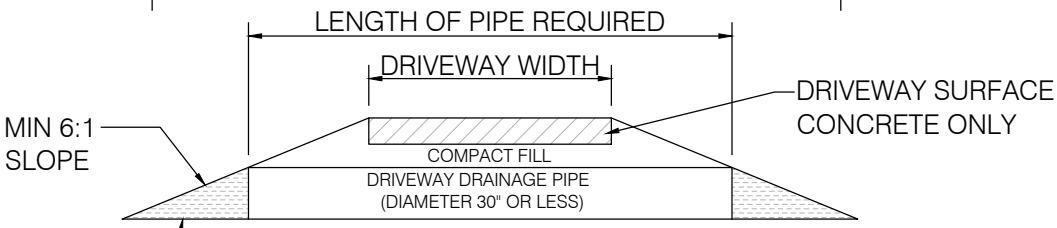

SECTION B-B

	DATE	TRANSPORTATION AND PUBLIC WORKS DEPARTMENT	SHEET. #
WEATHERFORD 1858 TRUE TEXAS	01/2020		C24
	DRAWN BY	RURAL DRIVEWAY APPROACH WITH CULVERT	
	CITY OF WEATHERFORD		

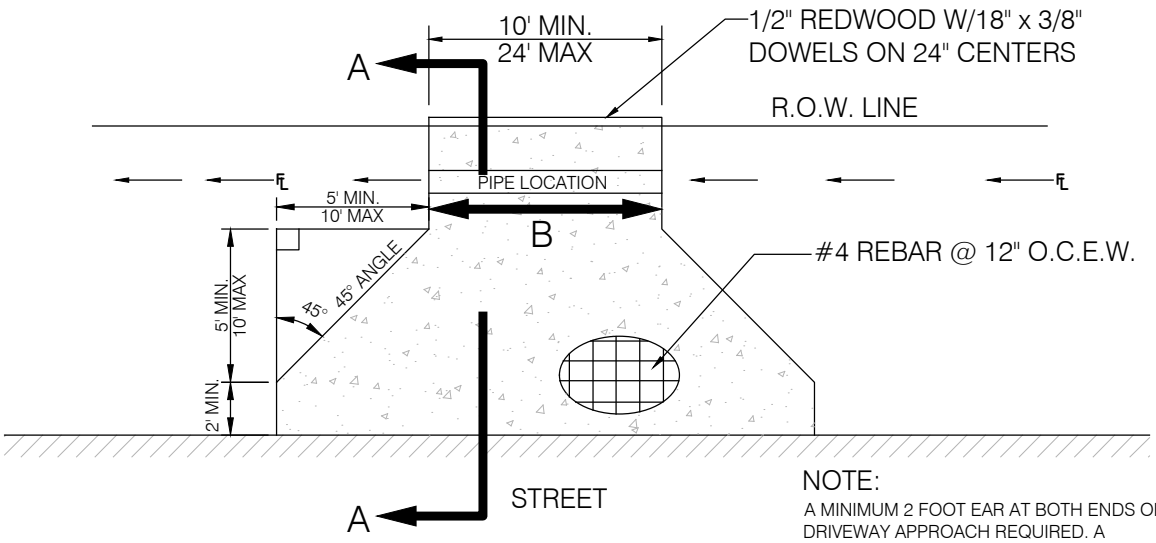

NOTE:
A MINIMUM 2 FOOT EAR AT BOTH ENDS OF DRIVEWAY APPROACH REQUIRED. A STRAIGHT EDGE FORM MUST BE PLACED IN FRONT OF DRIVEWAY APPROACH FLUSH WITH EXISTING ROADWAY PAVEMENT

1 STANDARD DRIVEWAY APPROACH W/CULVERT

FOR USE IN RURAL ROADS WITHIN RESIDENTIAL ZONING AREAS ONLY

NOT TO SCALE

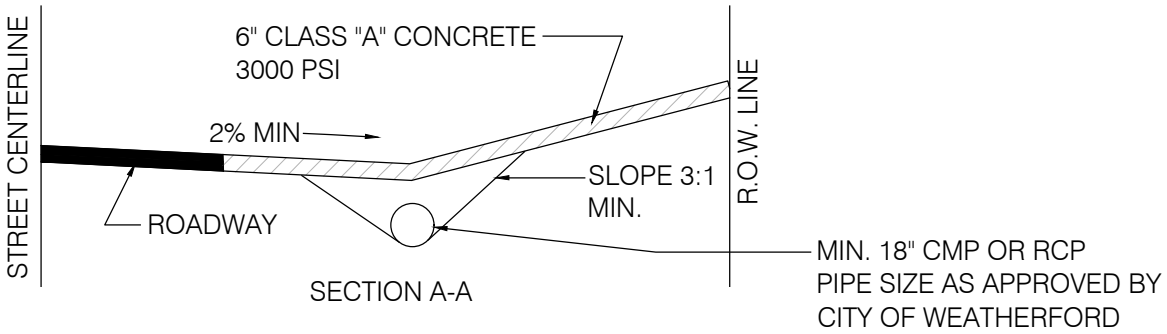

SECTION A-A

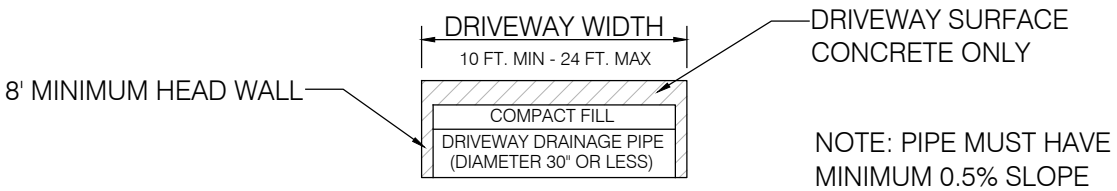

NOTE: PIPE MUST HAVE MINIMUM 0.5% SLOPE

SECTION B-B

	DATE	TRANSPORTATION AND PUBLIC WORKS DEPARTMENT	SHEET. #
WEATHERFORD 1858 TRUE TEXAS	01/2020		C25
	DRAWN BY	RURAL DRIVEWAY APPROACH WITH CULVERT FOR USE IN RURAL ROADS WITHIN RESIDENTIAL ZONING AREAS ONLY	
	CITY OF WEATHERFORD		

DIMENSION	MINIMUM	MAXIMUM
A	10'	24' *
B	5' R	10' R
C	50'	---
D	10'	---
E	20'	28'
F	---	---
G	---	---

NOTES:

1. THE ENTRANCE AND EXIT FROM A CIRCULAR RESIDENTIAL DRIVEWAY SHALL BE FROM THE SAME STREET. ENTRANCE FROM ONE STREET WITH EXIT TO ANOTHER STREET SHALL NOT BE PERMITTED.
2. NO PORTION OF ANY DRIVEWAY SHALL BE LOCATED WITHIN FOUR (4') FEET OF ANY FIRE HYDRANT, ELECTRICAL POLE, OR ANY ABOVE GROUND UTILITY STRUCTURE.
3. DRIVEWAYS ONTO THOROUGHFARE AND/OR COLLECTOR STREETS SHALL NOT BE PERMITTED WITHOUT WRITTEN APPROVAL OF THE DIRECTOR OF TRANSPORTATION AND PUBLIC WORKS DEPARTMENT OR HIS DESIGNATE.
4. *A MAXIMUM THROAT WIDTH OF 30' SHALL BE ALLOWED FOR RESIDENTIAL STRUCTURES WITH A THREE CAR GARAGE ONLY. ALL OTHERS A VARIANCE SHALL BE REQUESTED AND APPROVED BY THE DIRECTOR OF TRANSPORTATION AND PUBLIC WORKS DEPARTMENT.
5. FOR SIDEWALK DIMENSION AND SPECIFICATIONS PLEASE REFER TO STANDARD DETAIL SHEET. ALL SIDEWALKS CROSSING DRIVEWAYS SHALL BE SAME THICKNESS AS DRIVEWAY WITH A CROSS-SLOPE NOT TO EXCEED 2%.

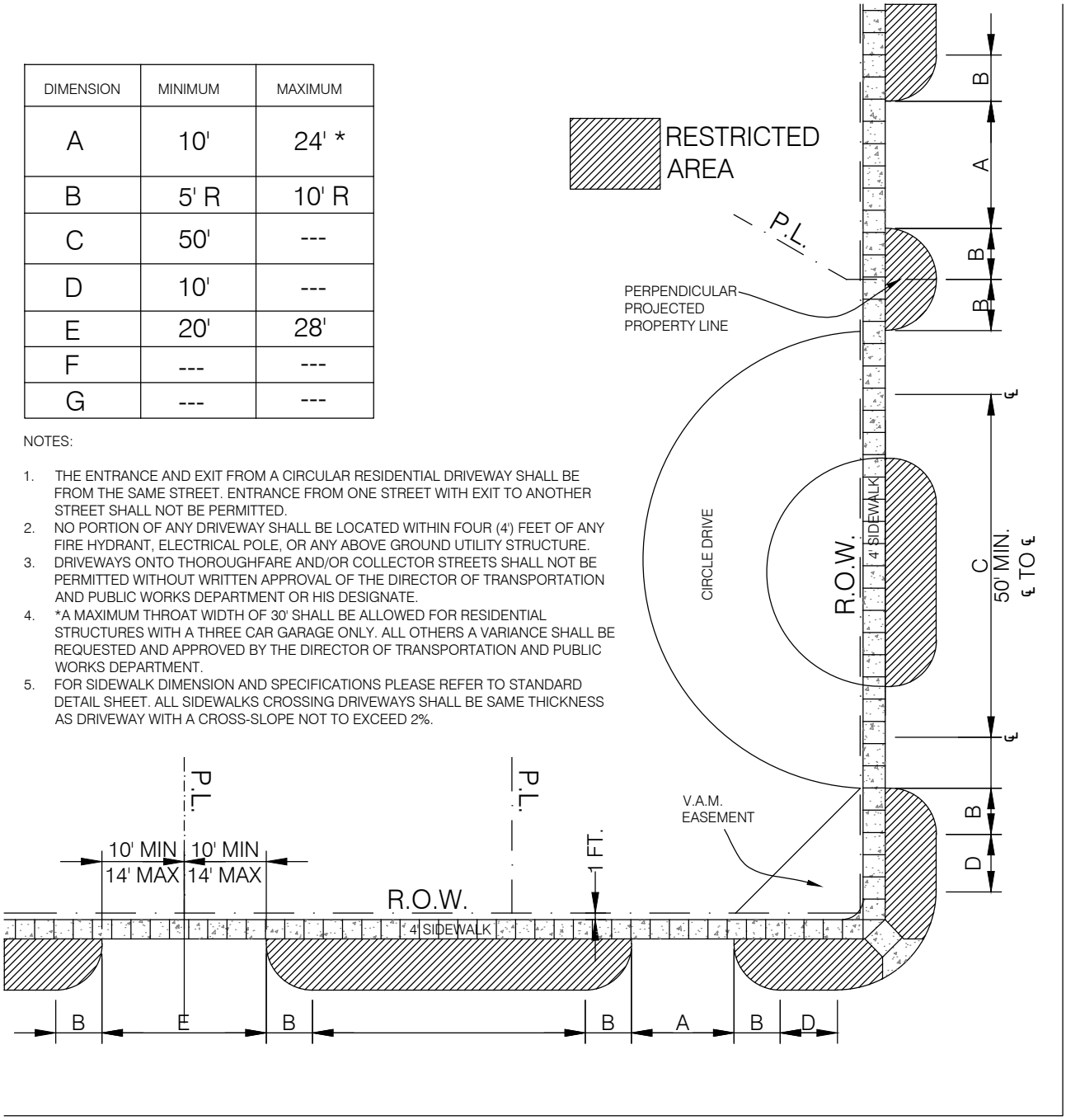

STREET C.L.
LOCAL STREET

1 RESIDENTIAL DRIVEWAY DESIGN

NOT TO SCALE

	DATE	TRANSPORTATION AND PUBLIC WORKS DEPARTMENT	SHEET. #
WEATHERFORD 1858 TRUE TEXAS	01/2020		C26
	DRAWN BY	RESIDENTIAL DRIVEWAY DESIGN	
	CITY OF WEATHERFORD		

DIMENSION	MINIMUM	MAXIMUM
A	16' (ONE WAY) 20' (TWO WAY)	40'
B	10' R	30' R
C	LOCAL 50' COLLECTOR 100'	---
D	LOCAL 50' COLLECTOR 100'	---
E	100'	---
F	---	---
G	---	---

NOTES:

1. FOR DRIVEWAY SPACING ON ARTERIAL STREETS PLEASE SEE FIGURE 6-3.
2. THE LOCATION OF ACCESS POINTS FOR COMMERCIAL DRIVEWAYS SHALL BE AT THE SOLE DISCRETION OF THE CITY OF WEATHERFORD TRANSPORTATION AND PUBLIC WORKS DEPARTMENT AFTER PROPER CONSIDERATION OF ANTICIPATED DRIVEWAY VOLUMES AND THEIR AFFECT ON TRAFFIC SAFETY.
3. A TRAFFIC IMPACT ANALYSIS MAY BE REQUIRED FOR PROPOSED DEVELOPMENT PROJECTS WHICH SHALL BE IN ACCORDANCE WITH CITY OF WEATHERFORD SUBDIVISION ORDINANCE.
4. FOR RESIDENTIAL DRIVEWAY DESIGN PLEASE SEE FIGURE 6-4 (A).
5. FOR SIDEWALK DIMENSION AND SPECIFICATIONS PLEASE REFER TO STANDARD DETAIL SHEET. ALL SIDEWALKS CROSSING DRIVEWAYS SHALL BE SAME THICKNESS AS DRIVEWAY WITH A CROSS-SLOPE NOT TO EXCEED 2%.
6. ONE WAY DRIVEWAYS SHALL HAVE APPROPRIATE SIGNS AND PAVEMENT MARKINGS.

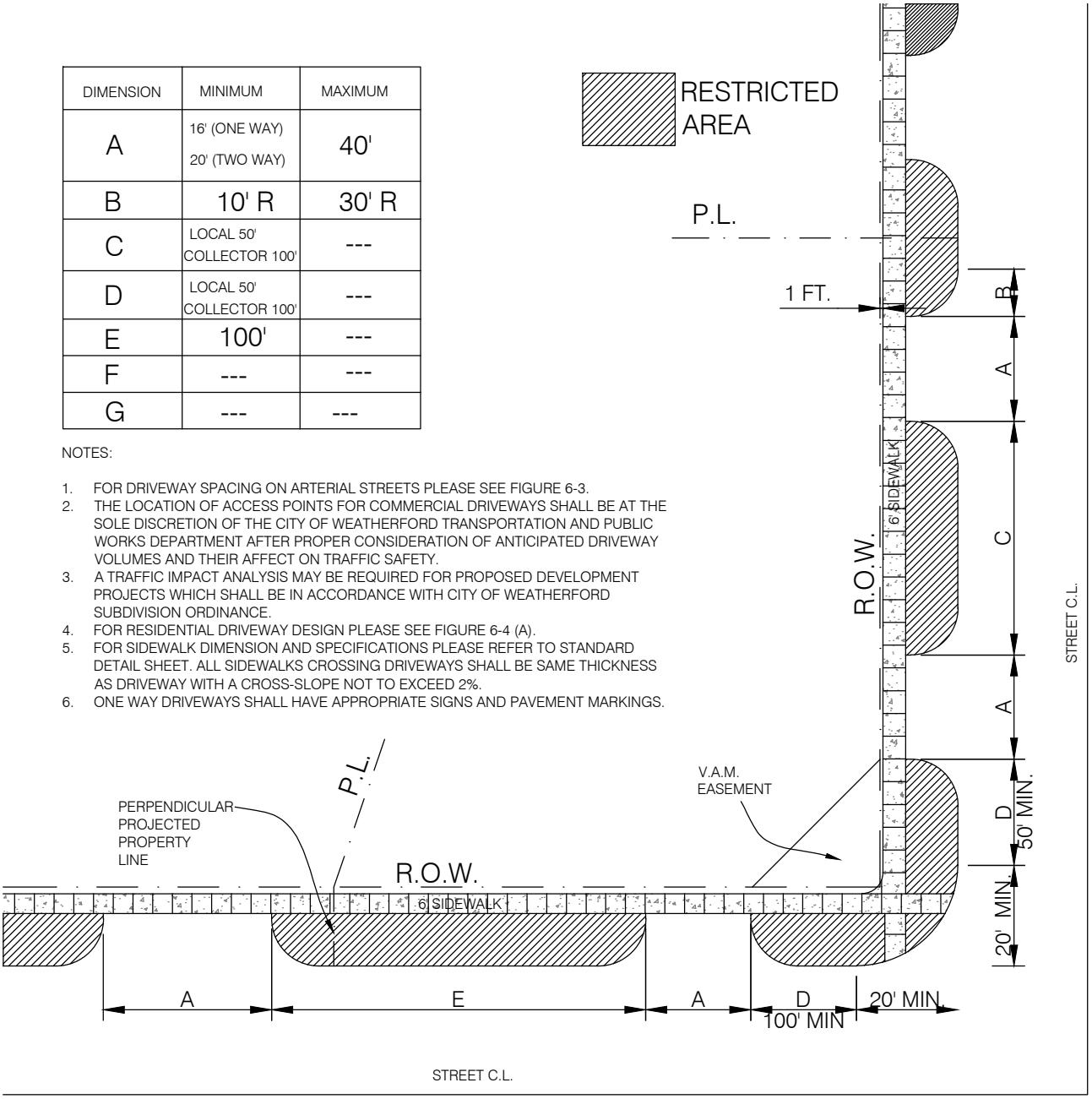

COLLECTOR STREET

1 COMMERCIAL DRIVEWAY DESIGN

NOT TO SCALE

	DATE	TRANSPORTATION AND PUBLIC WORKS DEPARTMENT	SHEET. #
WEATHERFORD 1858 TRUE TEXAS	01/2020		C27
	DRAWN BY	COMMERCIAL DRIVEWAY DESIGN	
	CITY OF WEATHERFORD		

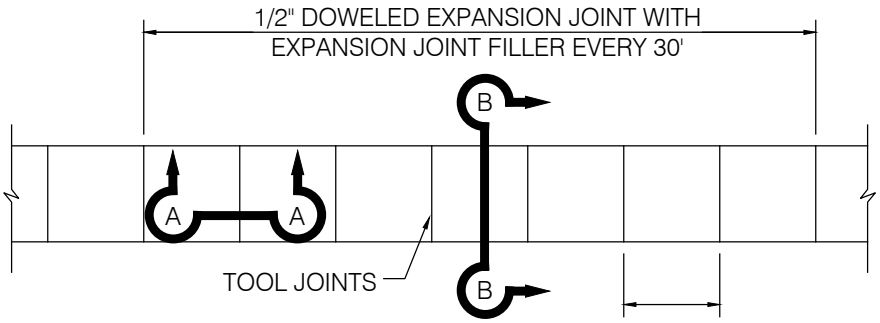

NOTE:
SIDEWALK SHALL BE 1 FOOT AWAY FROM R.O.W. LINE, UNLESS APPROVED BY CITY.

1 PLAN

NOT TO SCALE

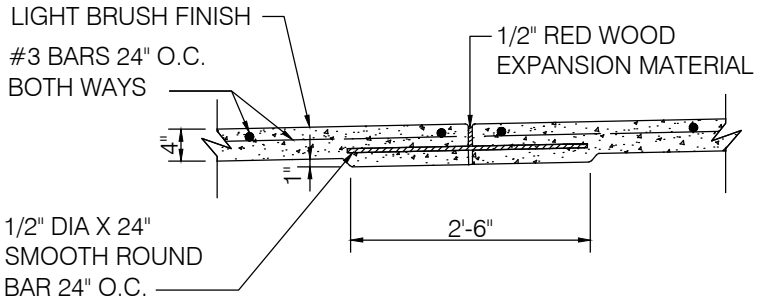

2 SECTION A-A

NOT TO SCALE

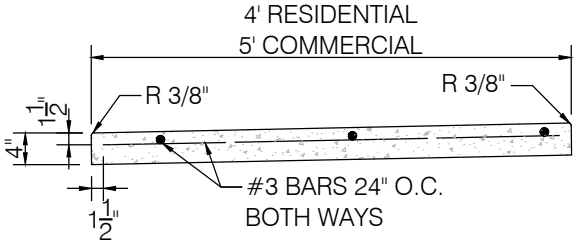

3 SECTION B-B

NOT TO SCALE

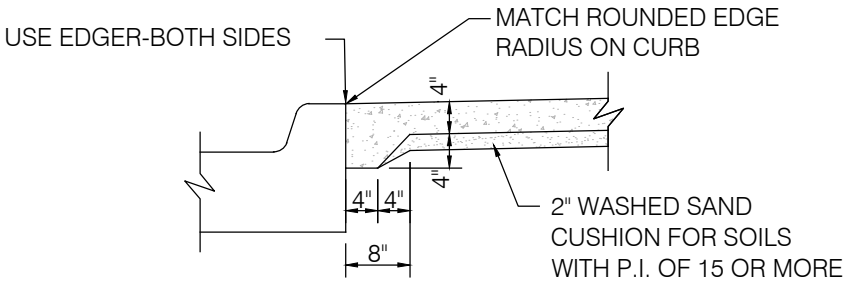

4 JOINT LUG DETAIL FOR SIDEWALK ADJACENT TO CURB

NOT TO SCALE

NOTES:

1. MAXIMUM GRADE OF THE SIDEWALK SHALL BE FIVE PERCENT (5%) OR THE GRADE OF ADJACENT OF STREET.
2. CROSS SLOPE OF SIDEWALK SHALL BE TWO PERCENT (2%) MAX PER A.D.A. OTHER THAN 5' SIDEWALK MAY BE SPECIFIED BY OWNER.
3. SIDEWALK SHALL BE CLASS "A" CONCRETE WITH #3 REBAR AT 18" CENTERS UNLESS OTHERWISE SPECIFIED BY OWNER.
4. ALL HONEYCOMB IN BACK OF CURB TO BE TROWEL-PLASTERED BEFORE POURING SIDEWALK.
5. LUG MAY BE FORMED BY SHAPING SUBGRADE TO APPROXIMATE DIMENSIONS SHOWN.
6. 1/2" EXPANSION JOINTS SHALL BE SPACED A 30' MAXIMUM INTERVALS OR AS OTHERWISE SPECIFIED. JOINTS SHALL BE RED WOOD WITH MINIMUM THREE (3) #4 SMOOTH DOWELS AT 12" SPACING.
7. ALL EXPANSION JOINTS SHALL BE SEALED WITH APPROVED JOINT SEALANT PER N.C.T.C.O.G. SPECIFICATIONS.
8. ALL SIDEWALKS CROSSING DRIVEWAYS SHALL BE SAME THICKNESS OF DRIVEWAY APPROACH.
9. SIDEWALK SUBGRADE SHALL BE COMPACTED TO 95% STANDARD PROCTOR DENSITY.
10. A MAXIMUM OF 1" SAND MAY BE USED FOR LEVEL UP ONLY.
11. ALL SIDEWALK CONSTRUCTION SHALL CONFORM TO THE LATEST A.D.A. RULES AND GUIDELINES AND TEXAS ACCESSIBILITY STANDARDS.
12. ALL SIDEWALK CONSTRUCTION SHALL CONFORM TO THE LATEST EDITION OF THE PUBLIC WORKS CONSTRUCTION STANDARDS, NORTH CENTRAL TEXAS.
13. OWNER/CONTRACTOR SHALL OBTAIN A R.O.W. EXCAVATION PERMIT PRIOR TO ANY WORK OR CONSTRUCTION. CONTACT TPW AT 817-598-4254.

	DATE	TRANSPORTATION AND PUBLIC WORKS DEPARTMENT	SHEET. #
WEATHERFORD 1858 TRUE TEXAS	01/2020		C28
	DRAWN BY	REINFORCED CONCRETE SIDEWALK	
	CITY OF WEATHERFORD		

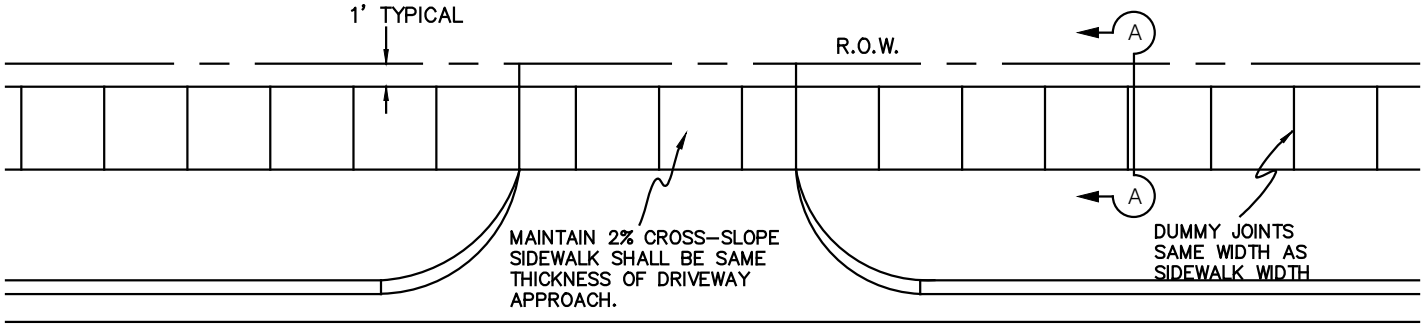

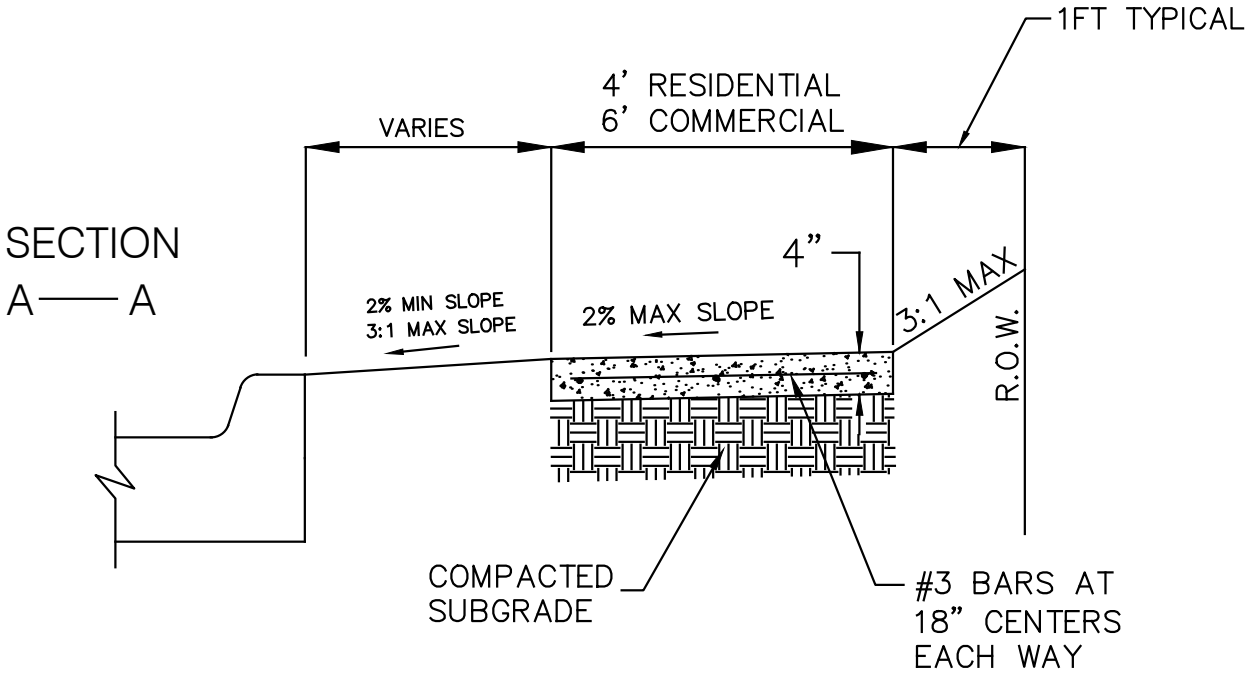

NOTES:

1. CROSS SLOPE OF SIDEWALK SHALL BE TWO PERCENT (2%) MAX INCLUDING OVER DRIVEWAY APPROACH.
2. SIDEWALK SHALL BE 4" THICKNESS, CLASS "A" CONCRETE WITH #3 REBAR AT 18" CENTERS UNLESS OTHERWISE SPECIFIED BY TPW.
3. 1/2" EXPANSION JOINTS SHALL BE SPACED AT 40' MAXIMUM INTERVALS OR AS OTHERWISE SPECIFIED. JOINTS SHALL BE RED WOOD WITH MINIMUM THREE (3) #4 SMOOTH DOWELS AT 12" SPACING.
4. ALL SIDEWALKS CROSSING DRIVEWAYS SHALL BE SAME THICKNESS OF DRIVEWAY APPROACH.
5. ALL SIDEWALK CONSTRUCTION SHALL CONFORM TO THE LATEST A.D.A. RULES AND GUIDELINES AND TEXAS ACCESSIBILITY STANDARDS.
6. FOR ITEMS NOT SPECIFIED IN THIS DETAIL PLEASE REFER TO N.C.T.C.O.G. PUBLIC WORKS CONSTRUCTION STANDARDS.
7. OWNER/CONTRACTOR SHALL OBTAIN A R.O.W. CONSTRUCTION PERMIT PRIOR TO ANY WORK OR CONSTRUCTION. CONTACT TPW AT 817-598-4254.

	DATE	TRANSPORTATION AND PUBLIC WORKS DEPARTMENT	SHEET. #
1858 WEATHERFORD TRUE TEXAS	01/2020		C28A
	DRAWN BY	CONCRETE SIDEWALK WITH PARKWAY	
	CITY OF WEATHERFORD		

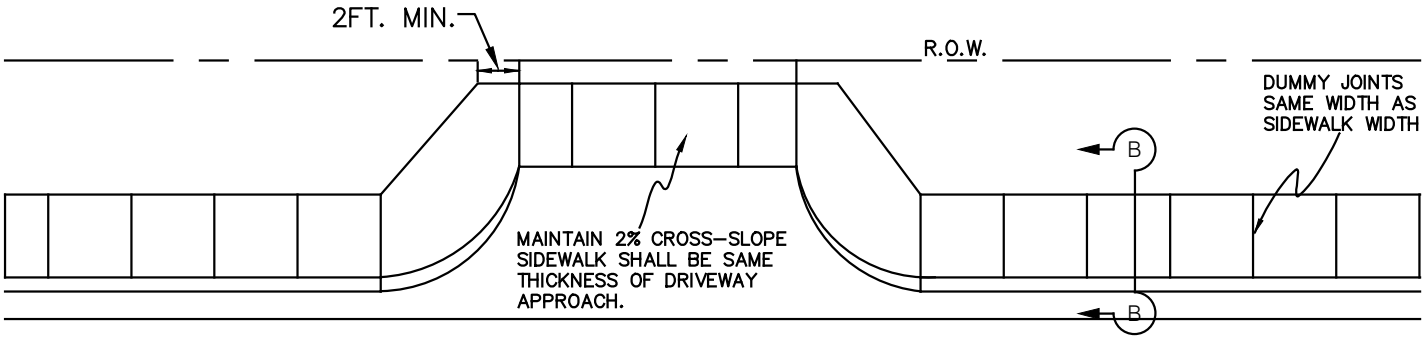

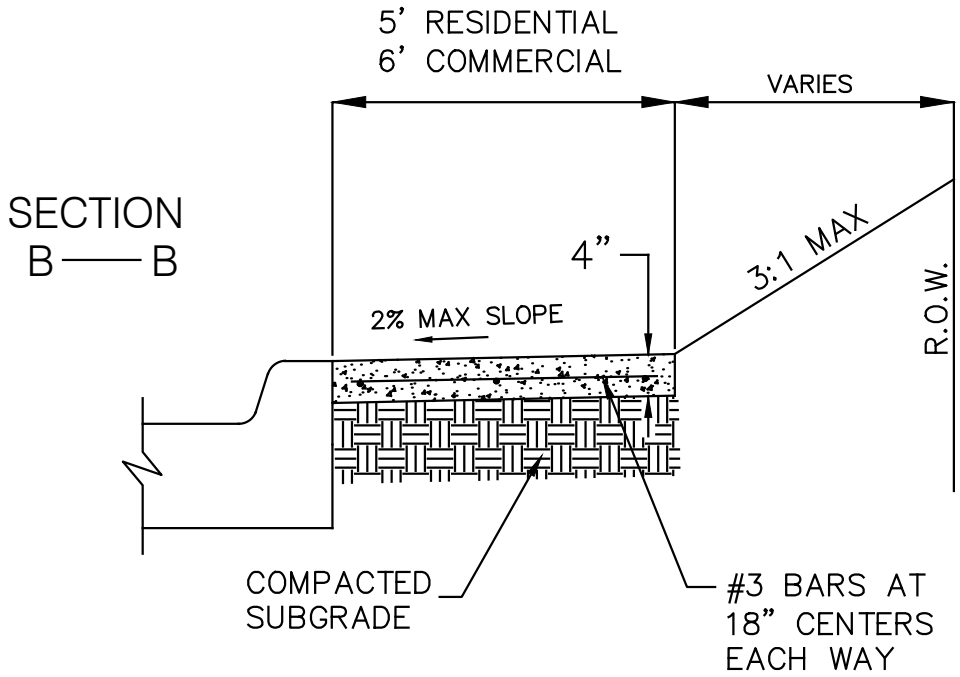

NOTES:

1. CROSS SLOPE OF SIDEWALK SHALL BE TWO PERCENT (2%) MAX INCLUDING OVER DRIVEWAY APPROACH.
2. SIDEWALK SHALL BE 4" THICKNESS, CLASS "A" CONCRETE WITH #3 REBAR AT 18" CENTERS UNLESS OTHERWISE SPECIFIED BY TPW.
3. 1/2" EXPANSION JOINTS SHALL BE SPACED AT 40' MAXIMUM INTERVALS OR AS OTHERWISE SPECIFIED. JOINTS SHALL BE RED WOOD WITH MINIMUM THREE (3) #4 SMOOTH DOWELS AT 12" SPACING.
4. ALL SIDEWALKS CROSSING DRIVEWAYS SHALL BE SAME THICKNESS OF DRIVEWAY APPROACH.
5. ALL SIDEWALK CONSTRUCTION SHALL CONFORM TO THE LATEST A.D.A. RULES AND GUIDELINES AND TEXAS ACCESSIBILITY STANDARDS.
6. FOR ITEMS NOT SPECIFIED IN THIS DETAIL PLEASE REFER TO N.C.T.C.O.G. PUBLIC WORKS CONSTRUCTION STANDARDS.
7. OWNER/CONTRACTOR SHALL OBTAIN A R.O.W. CONSTRUCTION PERMIT PRIOR TO ANY WORK OR CONSTRUCTION. CONTACT TPW AT 817-598-4254.

	DATE	TRANSPORTATION AND PUBLIC WORKS DEPARTMENT	SHEET. #
WEATHERFORD 1858 TRUE TEXAS	01/2020		C28B
	DRAWN BY	CONCRETE SIDEWALK ADJACENT TO CURB	
	CITY OF WEATHERFORD		

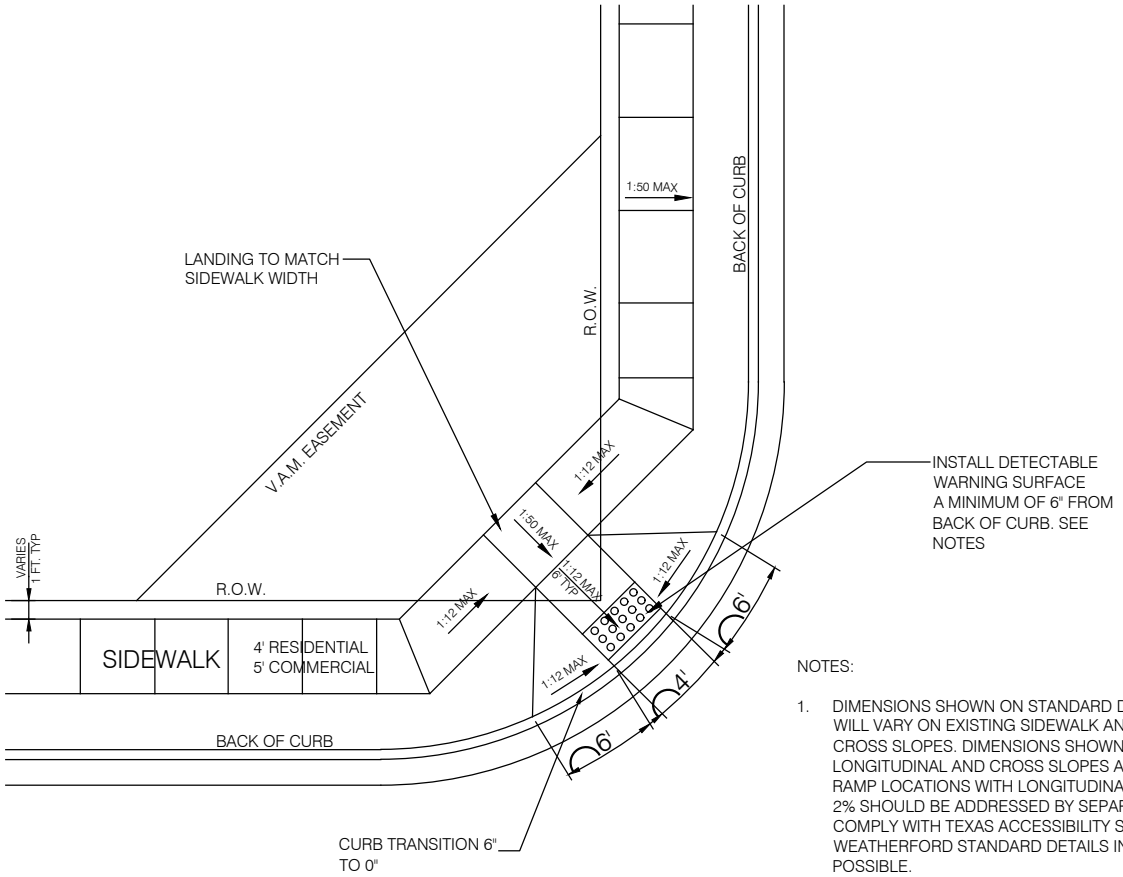

TYPE "A" RAMP
BARRIER FREE RAMP
AT INTERSECTION TYPICAL
FOR RESIDENTIAL
DEVELOPMENTS

NOTES:

1. DIMENSIONS SHOWN ON STANDARD DETAILS ARE APPROXIMATE AND WILL VARY ON EXISTING SIDEWALK AND STREET LONGITUDINAL AND CROSS SLOPES. DIMENSIONS SHOWN ASSUME EXISTING LONGITUDINAL AND CROSS SLOPES ARE LESS THAN 2%. RAMP LOCATIONS WITH LONGITUDINAL OR CROSS SLOPES EXCEEDING 2% SHOULD BE ADDRESSED BY SEPARATE DESIGN DETAILS THAT COMPLY WITH TEXAS ACCESSIBILITY STANDARDS AND MATCH CITY OF WEATHERFORD STANDARD DETAILS IN APPEARANCE AS MUCH AS POSSIBLE.
2. RAMPS FOR SIDEWALKS (WITH WIDTHS OTHER THAN SHOWN ON THESE DETAILS) SHOULD BE ADJUSTED TO FIT DIMENSIONS OF THE APPROACH SIDEWALKS CALLED FOR ON PLAN SHEETS.
3. FULL LENGTH OF RAMP (SLOPE 1:12) NOT TO EXCEED 6' IN LENGTH.
4. THE CONTRACTOR MUST NOTIFY THE CITY PRIOR TO INSTALLATION OF CONCRETE IF THE APPROACH SLOPE OF THE EXISTING SIDEWALK EXCEEDS 1:20 (5%) OR HAS A CROSSFALL GREATER THAN 1:50 (2%) AND NO DESIGN DETAILS ARE PROVIDED FOR THAT SPECIFIC LOCATION.
5. CONTRACTOR TO VERIFY ALL SLOPES PRIOR TO POURING CONCRETE. ALL SLOPES SHOULD BE IN COMPLIANCE WITH APPLICABLE STANDARDS FROM THE TEXAS DEPARTMENT OF LICENSING AND REGULATION.
6. LANDING PAD SHALL BE A MINIMUM OF 48" WIDTH AND MATCH SIDEWALK WIDTH. NO LANDING PAD SHALL BE LESS THAN THIS DIMENSION UNLESS OTHERWISE DIRECTED BY CITY. CROSS SLOPE SHALL NOT EXCEED 1:50 (2%) AT ANY DIRECTION.
7. IT SHALL BE THE CONTRACTORS RESPONSIBILITY TO ENSURE SLOPES MEET REQUIREMENTS OF THE TEXAS ACCESSIBILITY STANDARDS.
8. CONTRACTOR SHALL CONTACT TPW FOR INSPECTION PRIOR TO ANY PLACEMENT OF CONCRETE IN R.O.W.
9. A CURB SHALL BE CONSTRUCTED AT THE BACK OF THE WHEELCHAIR RAMP WHEN ELEVATION DIFFERENCE EXCEEDS 6".
10. CURB RAMPS SHALL BE CONSTRUCTED WITH SAME SPECIFICATIONS FOR SIDEWALK CONSTRUCTION UNLESS OTHERWISE NOTED.
11. FOR SIDEWALK DETAILS AND SPECIFICATIONS REFER TO SIDEWALK DETAIL SHEET.
12. ADA REPLACEABLE (WET SET) COMPOSITE TACTILE WARNING SURFACE UNIT (RED) AVAILABLE FROM ADA SOLUTIONS SHALL BE INSTALLED FOR ALL ADA RAMPS. DETECTABLE WARNING SHALL BE 24" LENGTH BY 48" WIDTH TRUNCATED DOMES THAT ARE TAS APPROVED. CONTRACTOR SHALL PROVIDE A MINIMUM 4" CONCRETE THICKNESS BENEATH THE ADA REPLACEABLE COMPOSITE TACTILE WARNING SURFACE UNIT.

CONVERSIONS
1:12 - APPROXIMATELY 8.3%
1:20 - APPROXIMATELY 5%
1:50 - APPROXIMATELY 1/4" PER 1' OR 2%

1

CURB RAMP DETAIL

NOT TO SCALE

	DATE	TRANSPORTATION AND PUBLIC WORKS DEPARTMENT	SHEET. #
1858 WEATHERFORD TRUE TEXAS	01/2020		C29
	DRAWN BY	CURB RAMP DETAIL TYPE "A" RAMP	
	CITY OF WEATHERFORD		

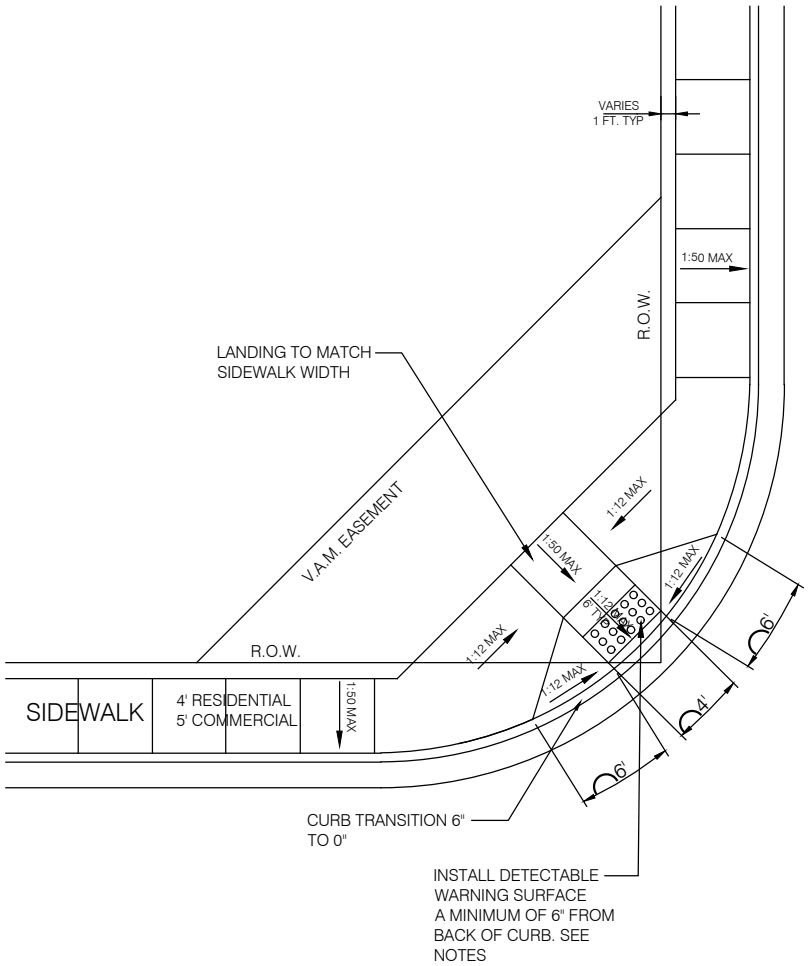

TYPE "B" RAMP
BARRIER FREE RAMP
WITH SIDEWALK AT CURB.

NOTES:

1. DIMENSIONS SHOWN ON STANDARD DETAILS ARE APPROXIMATE AND WILL VARY ON EXISTING SIDEWALK AND STREET LONGITUDINAL AND CROSS SLOPES. DIMENSIONS SHOWN ASSUME EXISTING LONGITUDINAL AND CROSS SLOPES ARE LESS THAN 2%. RAMP LOCATIONS WITH LONGITUDINAL OR CROSS SLOPES EXCEEDING 2% SHOULD BE ADDRESSED BY SEPARATE DESIGN DETAILS THAT COMPLY WITH TEXAS ACCESSIBILITY STANDARDS AND MATCH CITY OF WEATHERFORD STANDARD DETAILS IN APPEARANCE AS MUCH AS POSSIBLE.
2. RAMPS FOR SIDEWALKS (WITH WIDTHS OTHER THAN SHOWN ON THESE DETAILS) SHOULD BE ADJUSTED TO FIT DIMENSIONS OF THE APPROACH SIDEWALKS CALLED FOR ON PLAN SHEETS.
3. FULL LENGTH OF RAMP (SLOPE 1:12) NOT TO EXCEED 6' IN LENGTH.
4. THE CONTRACTOR MUST NOTIFY THE CITY PRIOR TO INSTALLATION OF CONCRETE IF THE APPROACH SLOPE OF THE EXISTING SIDEWALK EXCEEDS 1:20 (5%) OR HAS A CROSSFALL GREATER THAN 1:50 (2%) AND NO DESIGN DETAILS ARE PROVIDED FOR THAT SPECIFIC LOCATION.
5. CONTRACTOR TO VERIFY ALL SLOPES PRIOR TO POURING CONCRETE. ALL SLOPES SHOULD BE IN COMPLIANCE WITH APPLICABLE STANDARDS FROM THE TEXAS DEPARTMENT OF LICENSING AND REGULATION.
6. LANDING PAD SHALL BE A MINIMUM OF 48" WIDTH AND MATCH SIDEWALK WIDTH. NO LANDING PAD SHALL BE LESS THAN THIS DIMENSION UNLESS OTHERWISE DIRECTED BY CITY. CROSS SLOPE SHALL NOT EXCEED 1:50 (2%) AT ANY DIRECTION.
7. IT SHALL BE THE CONTRACTORS RESPONSIBILITY TO ENSURE SLOPES MEET REQUIREMENTS OF THE TEXAS ACCESSIBILITY STANDARDS.
8. CONTRACTOR SHALL CONTACT TPW FOR INSPECTION PRIOR TO ANY PLACEMENT OF CONCRETE IN R.O.W.
9. A CURB SHALL BE CONSTRUCTED AT THE BACK OF THE WHEELCHAIR RAMP WHEN ELEVATION DIFFERENCE EXCEEDS 6".
10. CURB RAMPS SHALL BE CONSTRUCTED WITH SAME SPECIFICATIONS FOR SIDEWALK CONSTRUCTION UNLESS OTHERWISE NOTED.
11. FOR SIDEWALK DETAILS AND SPECIFICATIONS REFER TO SIDEWALK DETAIL SHEET.
12. ADA REPLACEABLE (WET SET) COMPOSITE TACTILE WARNING SURFACE UNIT (RED) AVAILABLE FROM ADA SOLUTIONS SHALL BE INSTALLED FOR ALL ADA RAMPS. DETECTABLE WARNING SHALL BE 24" LENGTH BY 48" WIDTH TRUNCATED DOMES THAT ARE TAS APPROVED. CONTRACTOR SHALL PROVIDE A MINIMUM 4" CONCRETE THICKNESS BENEATH THE ADA REPLACEABLE COMPOSITE TACTILE WARNING SURFACE UNIT.

CONVERSIONS
1:12 - APPROXIMATELY 8.3%
1:20 - APPROXIMATELY 5%
1:50 - APPROXIMATELY 1/4" PER 1' OR 2%

1 CURB RAMP DETAIL

NOT TO SCALE

	DATE	TRANSPORTATION AND PUBLIC WORKS DEPARTMENT	SHEET. #
WEATHERFORD 1858 TRUE TEXAS	01/2020		C30
	DRAWN BY	CURB RAMP DETAIL TYPE "B" RAMP	
	CITY OF WEATHERFORD		

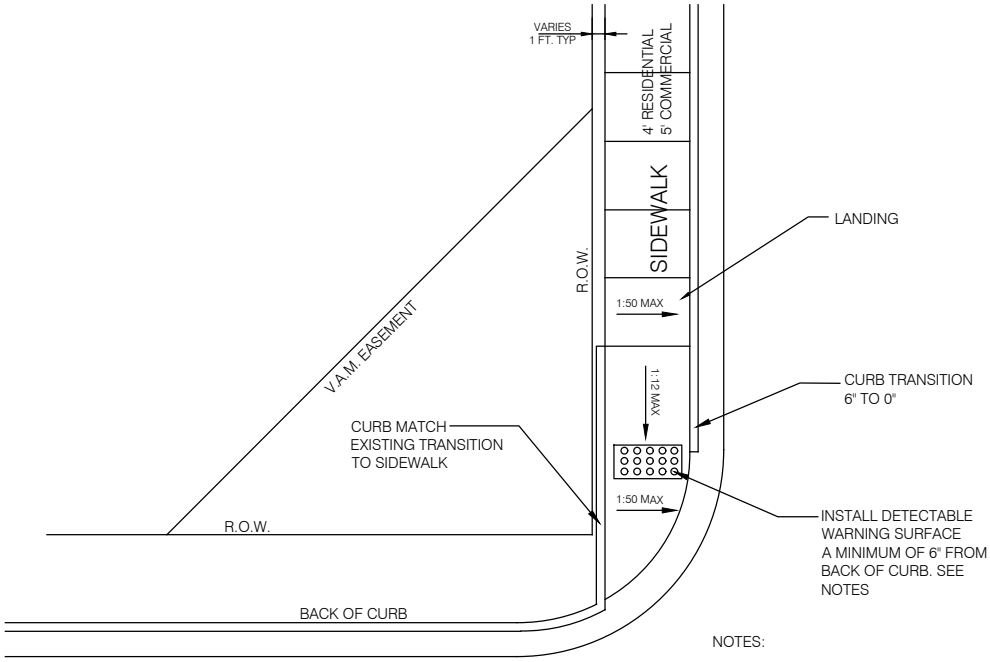

TYPE "C" RAMP
BARRIER FREE RAMP
WITH SIDEWALK AT CURB
ONE SIDE

NOTES:

1. DIMENSIONS SHOWN ON STANDARD DETAILS ARE APPROXIMATE AND WILL VARY ON EXISTING SIDEWALK AND STREET LONGITUDINAL AND CROSS SLOPES. DIMENSIONS SHOWN ASSUME EXISTING LONGITUDINAL AND CROSS SLOPES ARE LESS THAN 2%. RAMP LOCATIONS WITH LONGITUDINAL OR CROSS SLOPES EXCEEDING 2% SHOULD BE ADDRESSED BY SEPARATE DESIGN DETAILS THAT COMPLY WITH TEXAS ACCESSIBILITY STANDARDS AND MATCH CITY OF WEATHERFORD STANDARD DETAILS IN APPEARANCE AS MUCH AS POSSIBLE.
2. RAMPS FOR SIDEWALKS (WITH WIDTHS OTHER THAN SHOWN ON THESE DETAILS) SHOULD BE ADJUSTED TO FIT DIMENSIONS OF THE APPROACH SIDEWALKS CALLED FOR ON PLAN SHEETS.
3. FULL LENGTH OF RAMP (SLOPE 1:12) NOT TO EXCEED 6' IN LENGTH.
4. THE CONTRACTOR MUST NOTIFY THE CITY PRIOR TO INSTALLATION OF CONCRETE IF THE APPROACH SLOPE OF THE EXISTING SIDEWALK EXCEEDS 1:20 (5%) OR HAS A CROSSFALL GREATER THAN 1:50 (2%) AND NO DESIGN DETAILS ARE PROVIDED FOR THAT SPECIFIC LOCATION.
5. CONTRACTOR TO VERIFY ALL SLOPES PRIOR TO POURING CONCRETE. ALL SLOPES SHOULD BE IN COMPLIANCE WITH APPLICABLE STANDARDS FROM THE TEXAS DEPARTMENT OF LICENSING AND REGULATION.
6. LANDING PAD SHALL BE A MINIMUM OF 48" WIDTH AND MATCH SIDEWALK WIDTH. NO LANDING PAD SHALL BE LESS THAN THIS DIMENSION UNLESS OTHERWISE DIRECTED BY CITY. CROSS SLOPE SHALL NOT EXCEED 1:50 (2%) AT ANY DIRECTION.
7. IT SHALL BE THE CONTRACTORS RESPONSIBILITY TO ENSURE SLOPES MEET REQUIREMENTS OF THE TEXAS ACCESSIBILITY STANDARDS.
8. CONTRACTOR SHALL CONTACT TPW FOR INSPECTION PRIOR TO ANY PLACEMENT OF CONCRETE IN R.O.W.
9. A CURB SHALL BE CONSTRUCTED AT THE BACK OF THE WHEELCHAIR RAMP WHEN ELEVATION DIFFERENCE EXCEEDS 6".
10. CURB RAMPS SHALL BE CONSTRUCTED WITH SAME SPECIFICATIONS FOR SIDEWALK CONSTRUCTION UNLESS OTHERWISE NOTED.
11. FOR SIDEWALK DETAILS AND SPECIFICATIONS REFER TO SIDEWALK DETAIL SHEET.
12. ADA REPLACEABLE (WET SET) COMPOSITE TACTILE WARNING SURFACE UNIT (RED) AVAILABLE FROM ADA SOLUTIONS SHALL BE INSTALLED FOR ALL ADA RAMPS. DETECTABLE WARNING SHALL BE 24" LENGTH BY 48" WIDTH TRUNCATED DOMES THAT ARE TAS APPROVED. CONTRACTOR SHALL PROVIDE A MINIMUM 4" CONCRETE THICKNESS BENEATH THE ADA REPLACEABLE COMPOSITE TACTILE WARNING SURFACE UNIT.

CONVERSIONS
1:12 - APPROXIMATELY 8.3%
1:20 - APPROXIMATELY 5%
1:50 - APPROXIMATELY 1/4" PER 1' OR 2%

1

CURB RAMP DETAIL

NOT TO SCALE

	DATE	TRANSPORTATION AND PUBLIC WORKS DEPARTMENT	SHEET. #
1858 WEATHERFORD TRUE TEXAS	01/2020		C31
	DRAWN BY	CURB RAMP DETAIL TYPE "C" RAMP	
	CITY OF WEATHERFORD		

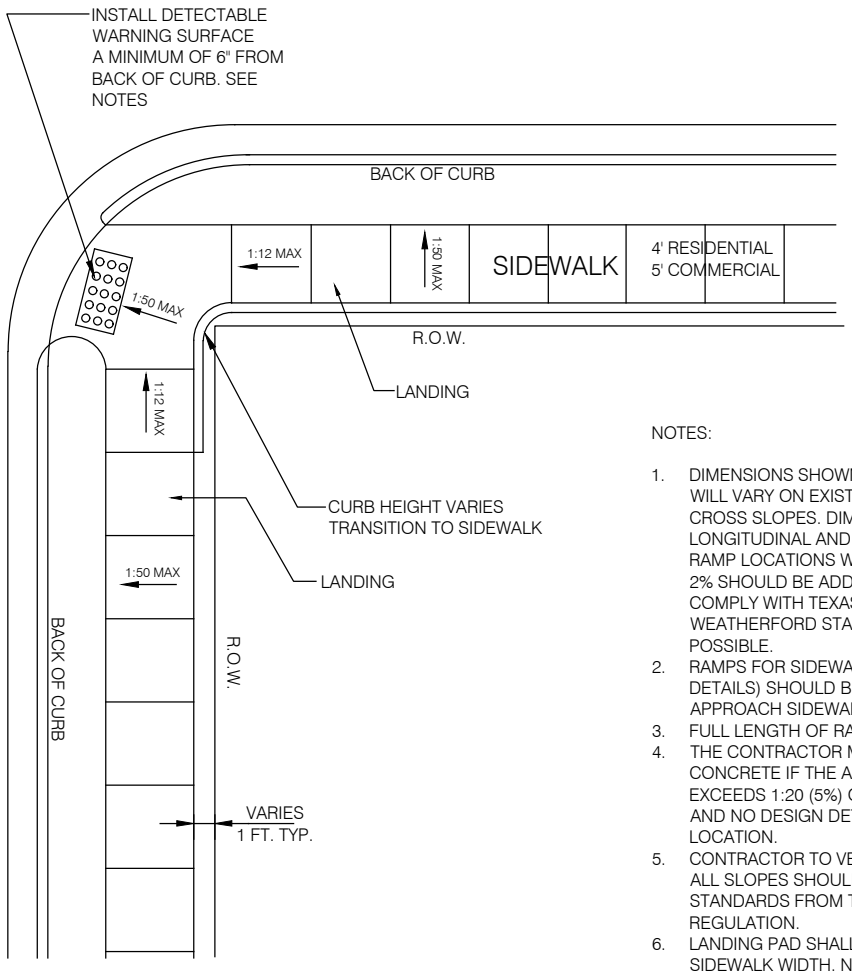

TYPE "D" RAMP
BARRIER FREE RAMP
WITH NO V.A.M. EASMENT

NOTES:

1. DIMENSIONS SHOWN ON STANDARD DETAILS ARE APPROXIMATE AND WILL VARY ON EXISTING SIDEWALK AND STREET LONGITUDINAL AND CROSS SLOPES. DIMENSIONS SHOWN ASSUME EXISTING LONGITUDINAL AND CROSS SLOPES ARE LESS THAN 2%. RAMP LOCATIONS WITH LONGITUDINAL OR CROSS SLOPES EXCEEDING 2% SHOULD BE ADDRESSED BY SEPARATE DESIGN DETAILS THAT COMPLY WITH TEXAS ACCESSIBILITY STANDARDS AND MATCH CITY OF WEATHERFORD STANDARD DETAILS IN APPEARANCE AS MUCH AS POSSIBLE.
2. RAMPS FOR SIDEWALKS (WITH WIDTHS OTHER THAN SHOWN ON THESE DETAILS) SHOULD BE ADJUSTED TO FIT DIMENSIONS OF THE APPROACH SIDEWALKS CALLED FOR ON PLAN SHEETS.
3. FULL LENGTH OF RAMP (SLOPE 1:12) NOT TO EXCEED 6' IN LENGTH.
4. THE CONTRACTOR MUST NOTIFY THE CITY PRIOR TO INSTALLATION OF CONCRETE IF THE APPROACH SLOPE OF THE EXISTING SIDEWALK EXCEEDS 1:20 (5%) OR HAS A CROSSFALL GREATER THAN 1:50 (2%) AND NO DESIGN DETAILS ARE PROVIDED FOR THAT SPECIFIC LOCATION.
5. CONTRACTOR TO VERIFY ALL SLOPES PRIOR TO POURING CONCRETE. ALL SLOPES SHOULD BE IN COMPLIANCE WITH APPLICABLE STANDARDS FROM THE TEXAS DEPARTMENT OF LICENSING AND REGULATION.
6. LANDING PAD SHALL BE A MINIMUM OF 48" WIDTH AND MATCH SIDEWALK WIDTH. NO LANDING PAD SHALL BE LESS THAN THIS DIMENSION UNLESS OTHERWISE DIRECTED BY CITY. CROSS SLOPE SHALL NOT EXCEED 1:50 (2%) AT ANY DIRECTION.
7. IT SHALL BE THE CONTRACTORS RESPONSIBILITY TO ENSURE SLOPES MEET REQUIREMENTS OF THE TEXAS ACCESSIBILITY STANDARDS.
8. CONTRACTOR SHALL CONTACT TPW FOR INSPECTION PRIOR TO ANY PLACEMENT OF CONCRETE IN R.O.W.
9. A CURB SHALL BE CONSTRUCTED AT THE BACK OF THE WHEELCHAIR RAMP WHEN ELEVATION DIFFERENCE EXCEEDS 6".
10. CURB RAMPS SHALL BE CONSTRUCTED WITH SAME SPECIFICATIONS FOR SIDEWALK CONSTRUCTION UNLESS OTHERWISE NOTED.
11. FOR SIDEWALK DETAILS AND SPECIFICATIONS REFER TO SIDEWALK DETAIL SHEET.
12. ADA REPLACEABLE (WET SET) COMPOSITE TACTILE WARNING SURFACE UNIT (RED) AVAILABLE FROM ADA SOLUTIONS SHALL BE INSTALLED FOR ALL ADA RAMPS. DETECTABLE WARNING SHALL BE 24" LENGTH BY 48" WIDTH TRUNCATED DOMES THAT ARE TAS APPROVED. CONTRACTOR SHALL PROVIDE A MINIMUM 4" CONCRETE THICKNESS BENEATH THE ADA REPLACEABLE COMPOSITE TACTILE WARNING SURFACE UNIT.

CONVERSIONS
1:12 - APPROXIMATELY 8.3%
1:20 - APPROXIMATELY 5%
1:50 - APPROXIMATELY 1/4" PER 1' OR 2%

1

CURB RAMP DETAIL

NOT TO SCALE

	DATE	TRANSPORTATION AND PUBLIC WORKS DEPARTMENT	SHEET. #
1858 WEATHERFORD TRUE TEXAS	01/2020		C32
	DRAWN BY	CURB RAMP DETAIL TYPE "D" RAMP	
	CITY OF WEATHERFORD		

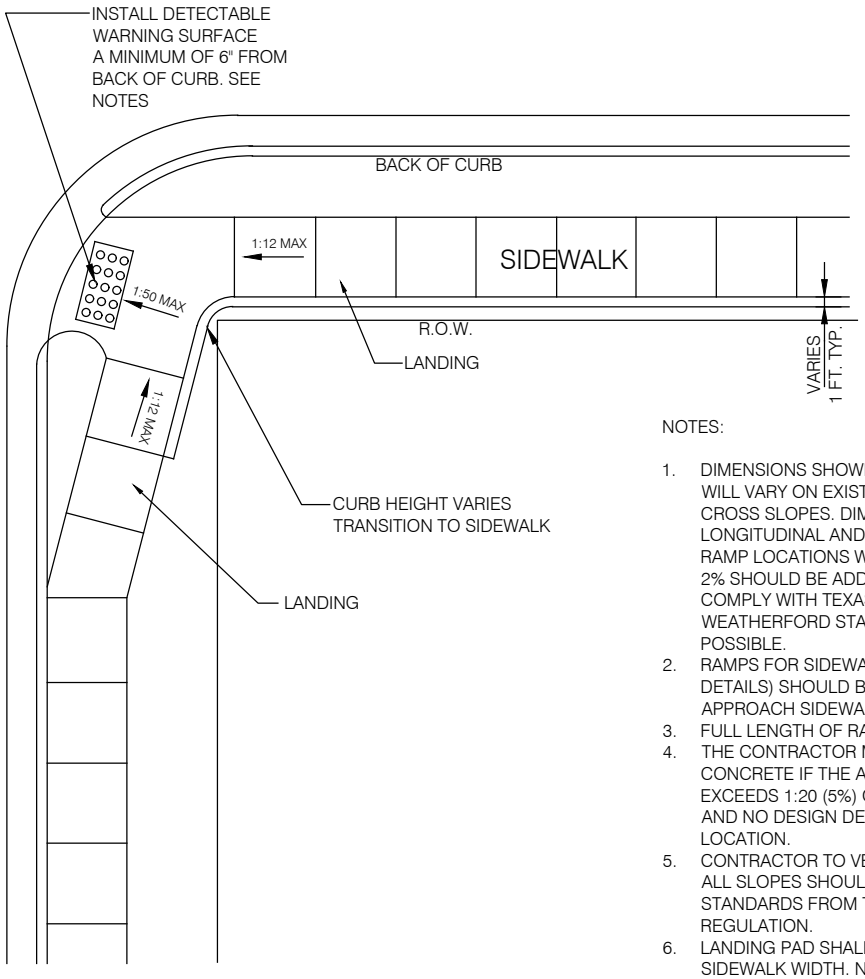

TYPE "E" RAMP
BARRIER FREE RAMP
WITH NO V.A.M. EASEMENT

NOTES:

1. DIMENSIONS SHOWN ON STANDARD DETAILS ARE APPROXIMATE AND WILL VARY ON EXISTING SIDEWALK AND STREET LONGITUDINAL AND CROSS SLOPES. DIMENSIONS SHOWN ASSUME EXISTING LONGITUDINAL AND CROSS SLOPES ARE LESS THAN 2%. RAMP LOCATIONS WITH LONGITUDINAL OR CROSS SLOPES EXCEEDING 2% SHOULD BE ADDRESSED BY SEPARATE DESIGN DETAILS THAT COMPLY WITH TEXAS ACCESSIBILITY STANDARDS AND MATCH CITY OF WEATHERFORD STANDARD DETAILS IN APPEARANCE AS MUCH AS POSSIBLE.
2. RAMPS FOR SIDEWALKS (WITH WIDTHS OTHER THAN SHOWN ON THESE DETAILS) SHOULD BE ADJUSTED TO FIT DIMENSIONS OF THE APPROACH SIDEWALKS CALLED FOR ON PLAN SHEETS.
3. FULL LENGTH OF RAMP (SLOPE 1:12) NOT TO EXCEED 6' IN LENGTH.
4. THE CONTRACTOR MUST NOTIFY THE CITY PRIOR TO INSTALLATION OF CONCRETE IF THE APPROACH SLOPE OF THE EXISTING SIDEWALK EXCEEDS 1:20 (5%) OR HAS A CROSSFALL GREATER THAN 1:50 (2%) AND NO DESIGN DETAILS ARE PROVIDED FOR THAT SPECIFIC LOCATION.
5. CONTRACTOR TO VERIFY ALL SLOPES PRIOR TO POURING CONCRETE. ALL SLOPES SHOULD BE IN COMPLIANCE WITH APPLICABLE STANDARDS FROM THE TEXAS DEPARTMENT OF LICENSING AND REGULATION.
6. LANDING PAD SHALL BE A MINIMUM OF 48" WIDTH AND MATCH SIDEWALK WIDTH. NO LANDING PAD SHALL BE LESS THAN THIS DIMENSION UNLESS OTHERWISE DIRECTED BY CITY. CROSS SLOPE SHALL NOT EXCEED 1:50 (2%) AT ANY DIRECTION.
7. IT SHALL BE THE CONTRACTORS RESPONSIBILITY TO ENSURE SLOPES MEET REQUIREMENTS OF THE TEXAS ACCESSIBILITY STANDARDS.
8. CONTRACTOR SHALL CONTACT TPW FOR INSPECTION PRIOR TO ANY PLACEMENT OF CONCRETE IN R.O.W.
9. A CURB SHALL BE CONSTRUCTED AT THE BACK OF THE WHEELCHAIR RAMP WHEN ELEVATION DIFFERENCE EXCEEDS 6".
10. CURB RAMPS SHALL BE CONSTRUCTED WITH SAME SPECIFICATIONS FOR SIDEWALK CONSTRUCTION UNLESS OTHERWISE NOTED.
11. FOR SIDEWALK DETAILS AND SPECIFICATIONS REFER TO SIDEWALK DETAIL SHEET.
12. ADA REPLACEABLE (WET SET) COMPOSITE TACTILE WARNING SURFACE UNIT (RED) AVAILABLE FROM ADA SOLUTIONS SHALL BE INSTALLED FOR ALL ADA RAMPS. DETECTABLE WARNING SHALL BE 24" LENGTH BY 48" WIDTH TRUNCATED DOMES THAT ARE TAS APPROVED. CONTRACTOR SHALL PROVIDE A MINIMUM 4" CONCRETE THICKNESS BENEATH THE ADA REPLACEABLE COMPOSITE TACTILE WARNING SURFACE UNIT.

CONVERSIONS
1:12 - APPROXIMATELY 8.3%
1:20 - APPROXIMATELY 5%
1:50 - APPROXIMATELY 1/4" PER 1' OR 2%

1 CURB RAMP DETAIL

NOT TO SCALE

	DATE	TRANSPORTATION AND PUBLIC WORKS DEPARTMENT	SHEET. #
WEATHERFORD 1858 TRUE TEXAS	01/2020		C33
	DRAWN BY	CURB RAMP DETAIL TYPE "E" RAMP	
	CITY OF WEATHERFORD		

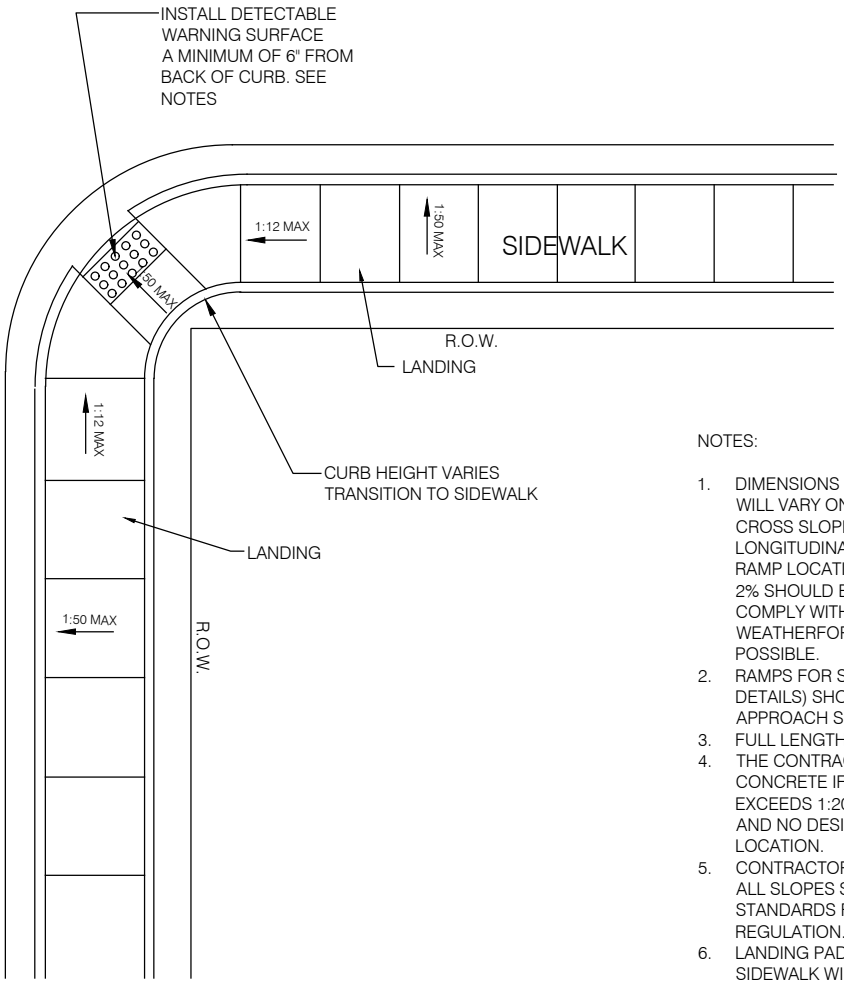

TYPE "F" RAMP
BARRIER FREE RAMP
WITH SIDEWALK AT CURB
NO V.A.M. EASMENT

NOTES:

1. DIMENSIONS SHOWN ON STANDARD DETAILS ARE APPROXIMATE AND WILL VARY ON EXISTING SIDEWALK AND STREET LONGITUDINAL AND CROSS SLOPES. DIMENSIONS SHOWN ASSUME EXISTING LONGITUDINAL AND CROSS SLOPES ARE LESS THAN 2%. RAMP LOCATIONS WITH LONGITUDINAL OR CROSS SLOPES EXCEEDING 2% SHOULD BE ADDRESSED BY SEPARATE DESIGN DETAILS THAT COMPLY WITH TEXAS ACCESSIBILITY STANDARDS AND MATCH CITY OF WEATHERFORD STANDARD DETAILS IN APPEARANCE AS MUCH AS POSSIBLE.
2. RAMPS FOR SIDEWALKS (WITH WIDTHS OTHER THAN SHOWN ON THESE DETAILS) SHOULD BE ADJUSTED TO FIT DIMENSIONS OF THE APPROACH SIDEWALKS CALLED FOR ON PLAN SHEETS.
3. FULL LENGTH OF RAMP (SLOPE 1:12) NOT TO EXCEED 6' IN LENGTH.
4. THE CONTRACTOR MUST NOTIFY THE CITY PRIOR TO INSTALLATION OF CONCRETE IF THE APPROACH SLOPE OF THE EXISTING SIDEWALK EXCEEDS 1:20 (5%) OR HAS A CROSSFALL GREATER THAN 1:50 (2%) AND NO DESIGN DETAILS ARE PROVIDED FOR THAT SPECIFIC LOCATION.
5. CONTRACTOR TO VERIFY ALL SLOPES PRIOR TO POURING CONCRETE. ALL SLOPES SHOULD BE IN COMPLIANCE WITH APPLICABLE STANDARDS FROM THE TEXAS DEPARTMENT OF LICENSING AND REGULATION.
6. LANDING PAD SHALL BE A MINIMUM OF 48" WIDTH AND MATCH SIDEWALK WIDTH. NO LANDING PAD SHALL BE LESS THAN THIS DIMENSION UNLESS OTHERWISE DIRECTED BY CITY. CROSS SLOPE SHALL NOT EXCEED 1:50 (2%) AT ANY DIRECTION.
7. IT SHALL BE THE CONTRACTORS RESPONSIBILITY TO ENSURE SLOPES MEET REQUIREMENTS OF THE TEXAS ACCESSIBILITY STANDARDS.
8. CONTRACTOR SHALL CONTACT TPW FOR INSPECTION PRIOR TO ANY PLACEMENT OF CONCRETE IN R.O.W.
9. A CURB SHALL BE CONSTRUCTED AT THE BACK OF THE WHEELCHAIR RAMP WHEN ELEVATION DIFFERENCE EXCEEDS 6".
10. CURB RAMPS SHALL BE CONSTRUCTED WITH SAME SPECIFICATIONS FOR SIDEWALK CONSTRUCTION UNLESS OTHERWISE NOTED.
11. FOR SIDEWALK DETAILS AND SPECIFICATIONS REFER TO SIDEWALK DETAIL SHEET.
12. ADA REPLACEABLE (WET SET) COMPOSITE TACTILE WARNING SURFACE UNIT (RED) AVAILABLE FROM ADA SOLUTIONS SHALL BE INSTALLED FOR ALL ADA RAMPS. DETECTABLE WARNING SHALL BE 24" LENGTH BY 48" WIDTH TRUNCATED DOMES THAT ARE TAS APPROVED. CONTRACTOR SHALL PROVIDE A MINIMUM 4" CONCRETE THICKNESS BENEATH THE ADA REPLACEABLE COMPOSITE TACTILE WARNING SURFACE UNIT.

CONVERSIONS
1:12 - APPROXIMATELY 8.3%
1:20 - APPROXIMATELY 5%
1:50 - APPROXIMATELY 1/4" PER 1' OR 2%

1 CURB RAMP DETAIL

NOT TO SCALE

	DATE	TRANSPORTATION AND PUBLIC WORKS DEPARTMENT	SHEET. #
WEATHERFORD 1858 TRUE TEXAS	01/2020		C34
	DRAWN BY	CURB RAMP DETAIL TYPE "F" RAMP	
	CITY OF WEATHERFORD		

NOTE:

1. PROVIDE VERTICAL EXPANSION IN WALL AT 25' MAX. SPACING.
2. WALL DESIGN ASSUMES NO SURCHARGE. A SPECIAL ENGINEERING ANALYSIS IS REQUIRED FOR OTHER CONDITIONS.

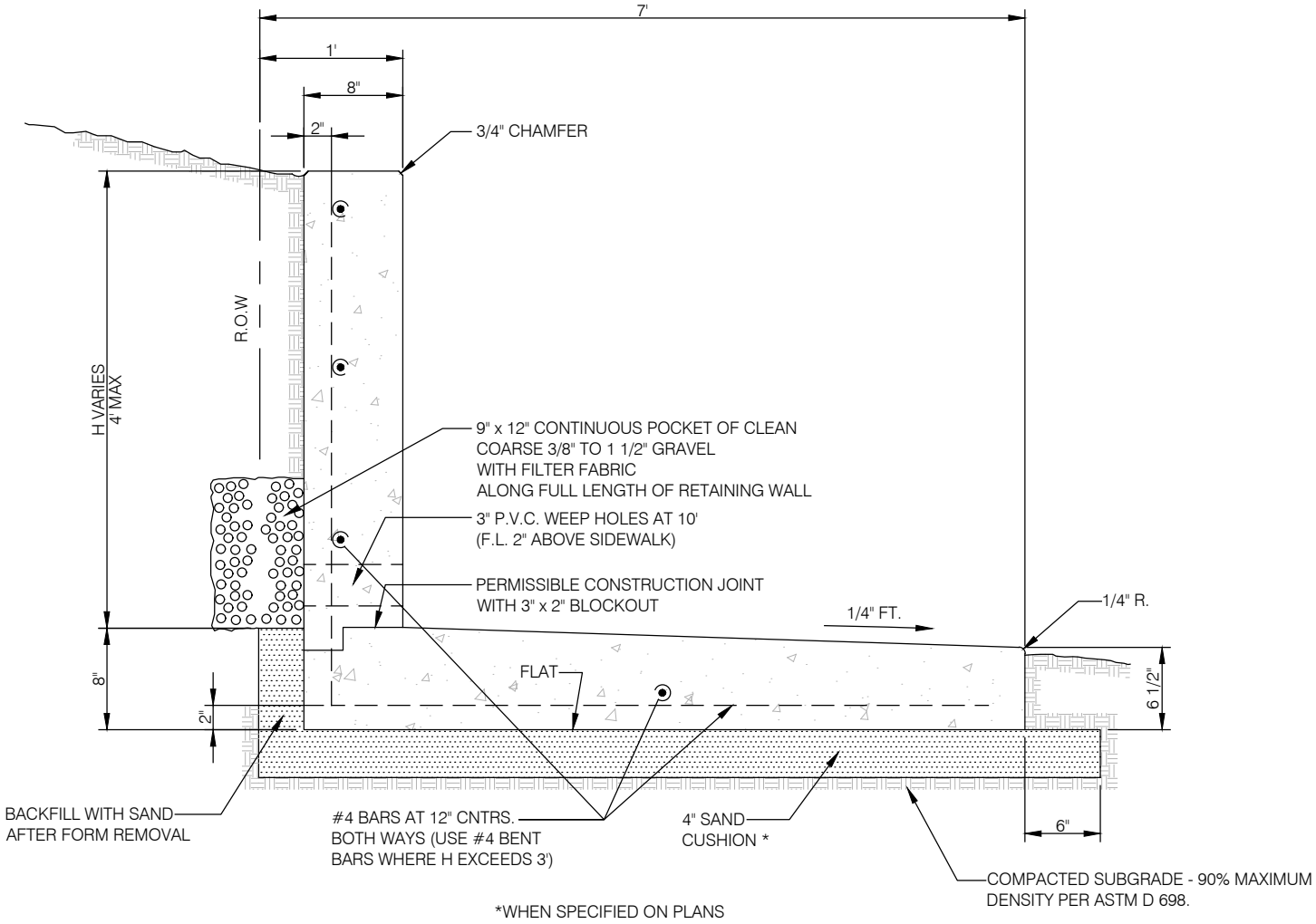

*WHEN SPECIFIED ON PLANS

RETAINING WALL WITH
INTEGRAL SIDEWALK

1 RETAINING WALL SECTION

NOT TO SCALE

	DATE	TRANSPORTATION AND PUBLIC WORKS DEPARTMENT	SHEET. #
WEATHERFORD 1858 TRUE TEXAS	01/2020		C35
	DRAWN BY	RETAINING WALL WITH INTEGRAL SIDEWALK	
	CITY OF WEATHERFORD		

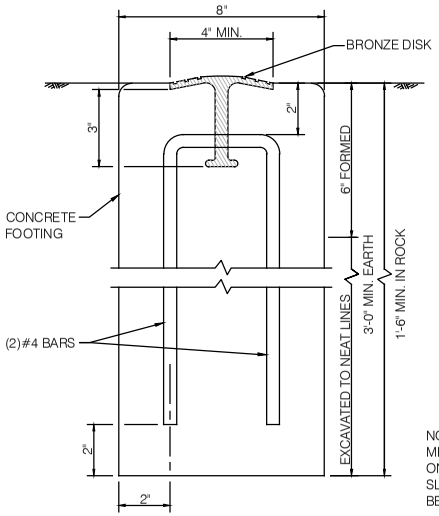

SECTION A-A

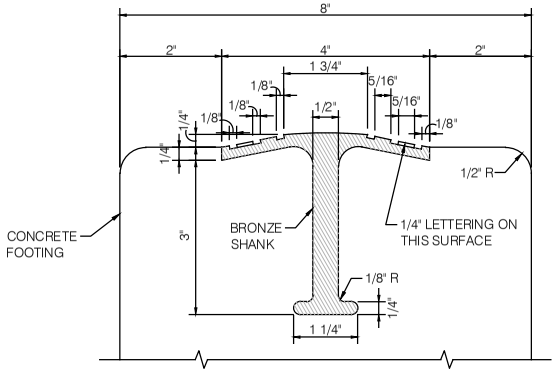

SECTION THRU TOP OF ROW MARKER

GENERAL NOTES:

1. ALL MATERIALS AND CONSTRUCTION SHALL BE IN ACCORDANCE WITH TXDOT ITEM 538, "RIGHT OF WAY MARKERS."
2. RIGHT-OF-WAY MARKER CONCRETE SHALL BE POURED IN PLACE. THE BRONZE DISKS SHALL BE SET TO THE CORRECT LINE AND GRADE, AS DIRECTED BY A REGISTERED LAND SURVEYOR.
3. THE BRONZE DISK IS AVAILABLE THROUGH CITY OF WEATHERFORD TPW DEPARTMENT. PLEASE CONTACT FIELD SERVICES DIVISION AT 817-598-4170. EXCAVATION OF THE MARKER LOCATIONS SHALL BE MADE OF UNIFORM LINES EXCEPT FOR THE TOP OF 6 INCHES WHICH SHALL BE FORMED WITH REMOVABLE FORMS. THE TOP PART OF THE MARKER AROUND THE BRONZE DISK SHALL RECEIVE A TROWEL FINISH.
4. ONCE THE CONCRETE HAS SET, THE SURVEYOR WILL STENCIL THE REQUIRED SURVEY DATA AND, WITH A CHISEL OR CENTER PUNCH, CUT ACROSS MARKER THE EXACT LOCATION OF THE RIGHT-OF-WAY LINE OR PROPERTY CORNER IN THE BRONZE DISK.

NOTE:
MEASUREMENT OF GROOVES ON FACE OF DISK MAY VARY SLIGHTLY. TOP SURFACE MAY BE ARCHED.

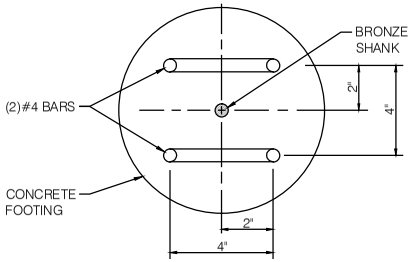

CROSS SECTION THRU MARKER

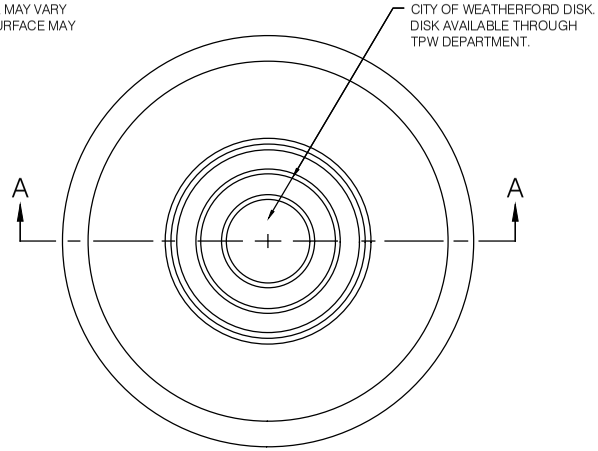

TOP VIEW OF ROW MARKER

DATE	01/2020
DRAWN BY	CITY OF WEATHERFORD

TRANSPORTATION AND PUBLIC WORKS DEPARTMENT

MONUMENT DETAIL

SHEET. #

C36

SHEET. #

C36

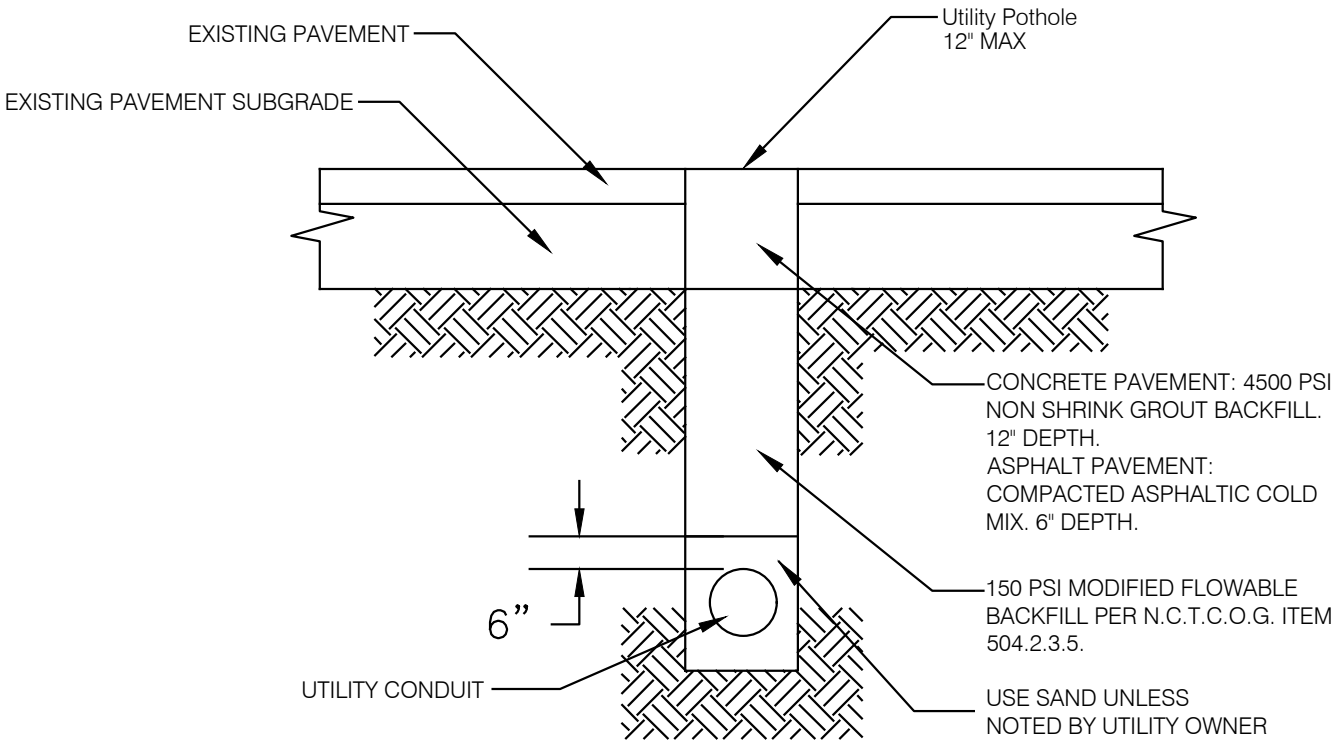

NOTES:

1. A right-of-way construction permit is required for all pavement utility pothole excavations.
2. Keyhole cores through the roadway pavement shall use diamond core drilling equipment. Open pavement cut utility pothole shall be sawcut in a square shape. Any other method shall be approved by the Transportation and Public Works Director.
3. Drilled core holes or pavement cuts over 12” shall be repaired per City's utility pavement repair cut detail or as determined by Director.
4. Adjacent utility potholes shall not be closer than 3 feet from each other (edge to edge), shall not be adjacent to pavement crack greater than $\frac{1}{8}$ " wide, and shall not be closer than 4 feet from a tool or construction pavement joint.
5. No more than four multiple utility potholes within a 200 square foot area, as measured within the smallest rectangular area that fully encompasses any four utility potholes, will be allowed unless approved by the TPW Director.
6. Keyhole pothole excavation and repair shall be completed within 48 hours.

WEATHERFORD 1858 TRUE TEXAS	DATE 01/2020	TRANSPORTATION AND PUBLIC WORKS DEPARTMENT	SHEET. #
	DRAWN BY CITY OF WEATHERFORD	PAVEMENT CORE AND UTILITY POTHOLING REPAIR	C37

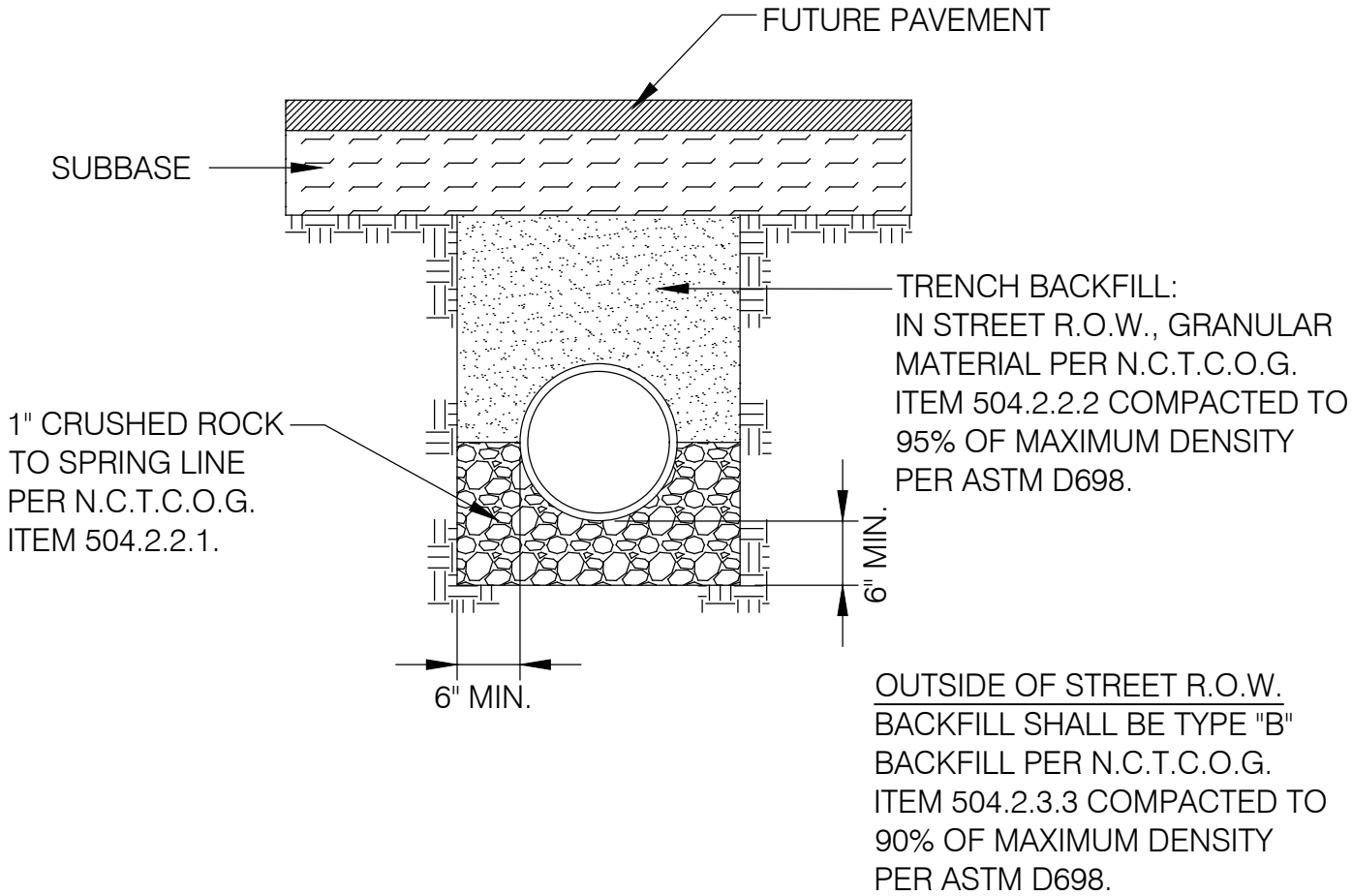

1 STORM SEWER DETAIL

NOT TO SCALE

NOTES:

1. ITEM NUMBERS REFER TO N.C.T.C.O.G. "STANDARD SPECIFICATIONS FOR PUBLIC WORKS CONSTRUCTION" 4TH EDITION.
2. FOR STORM SEWER MATERIAL AND SPECIFICATION REFER TO CITY OF WEATHERFORD ENGINEERING AND DESIGN CONSTRUCTION MANUAL, LATEST VERSION.
3. FOR STORM SEWER INSTALLATION UNDER EXISTING PAVEMENT, REFER TO CITY DETAIL S2.1 OR S2.2 FOR BACKFILL STANDARDS. INSTALL EMBEDMENT AS SPECIFIED IN THIS DETAIL.

	DATE	TRANSPORTATION AND PUBLIC WORKS DEPARTMENT	SHEET. #
1858 WEATHERFORD TRUE TEXAS	05/2020		S1
	DRAWN BY	STORM SEWER DETAIL	
	CITY OF WEATHERFORD		

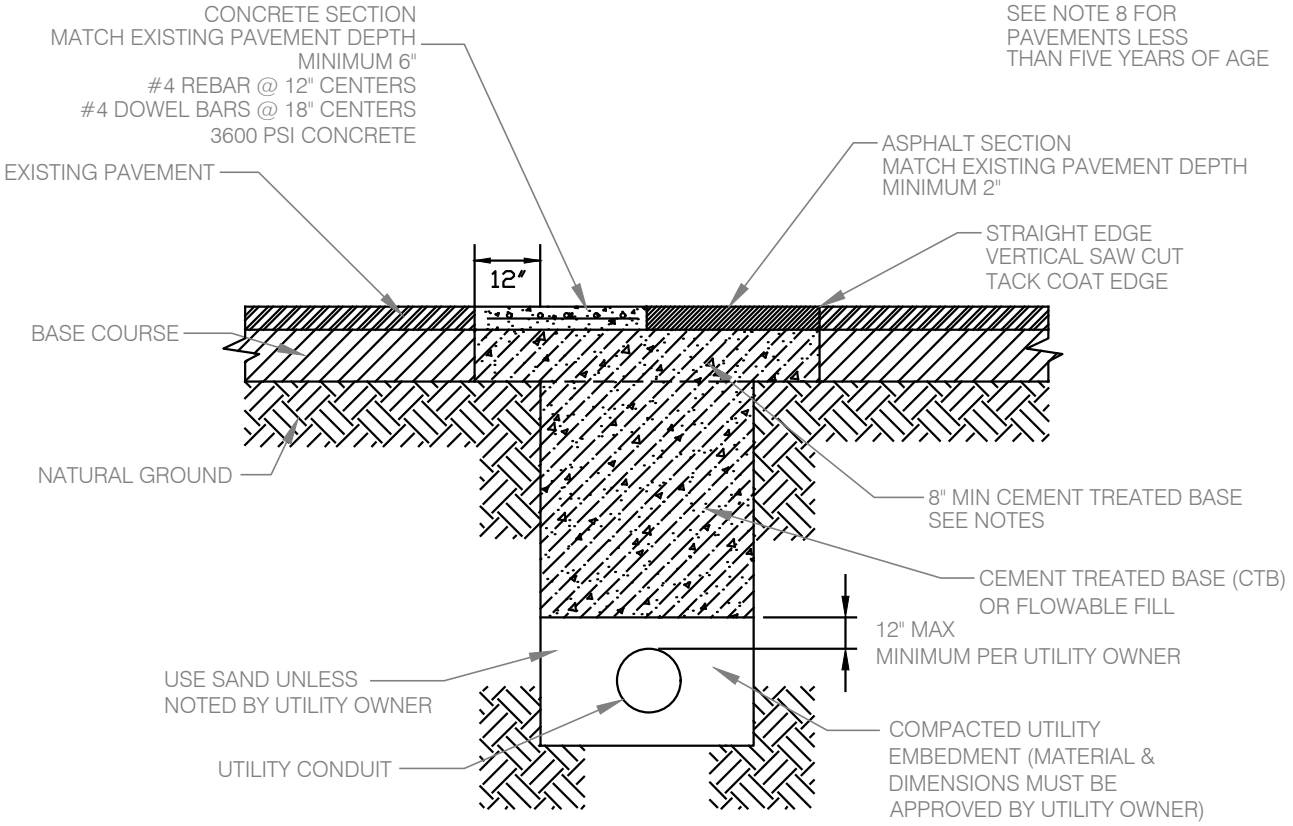

NOTES:

1. Utility owner or contractor is required to obtain a Right-of-Way (R.O.W.) Construction permit prior to any work within the public right-of-way including public alleyway and/or easements. All work within City of Weatherford R.O.W. shall be in accordance with Right-of-Way Ordinance 759-2016-05.
2. Traffic control plan (TCP) shall be submitted with R.O.W. Construction permit and no work shall start until R.O.W. permit is approved.
3. For emergency utility repairs, contractor/owner shall submit R.O.W. Construction permit as soon as possible but no later than 48 hours from initial utility excavation.
4. Utility excavations shall be backfilled with Cement Treated Base (CTB) which consist of flex base material with two sacks of cement type I/II per cubic yard mixed in a concrete mixer or transit mixed. CTB may be mixed on site with approval from Director of TPW or representative. CTB shall be mechanically compacted in lifts no more than 12 inches. This repair detail is for localized utility repairs and for trenches less than 25 linear feet.
5. Temporary asphalt shall be placed over backfill until permanent asphalt patch is completed.
6. All permanent pavement repairs shall be square and perpendicular or parallel to the roadway. Refer to N.C.T.C.O.G. Pavement Cut and Repair detail 3070C & 3070D for additional repair limits. All final pavement repairs shall be approved by TPW Director or representative.
7. Final pavement repairs shall be completed within 21 days from completion of repair/work.
8. Utility cuts on street pavements less than five years of age or greater than 80 Pavement Condition Index (PCI) refer to detail S2.3.
9. All work shall be per City specifications and N.C.T.C.O.G. Public Works Construction Standards and Specifications, latest edition.
10. Utility owner is responsible for final repairs and for any failures up to one year from final inspection of repair.
11. Contact TPW at 817-598-4234 for inspection of backfill and pavement repairs at least 24 hours from beginning work.

NOT TO SCALE

	DATE	TRANSPORTATION AND PUBLIC WORKS DEPARTMENT	SHEET. #
WEATHERFORD 1858 TRUE TEXAS	06/2020		S2.1
	DRAWN BY	UTILITY REPAIR DETAIL PAVED AREAS	
	CITY OF WEATHERFORD		

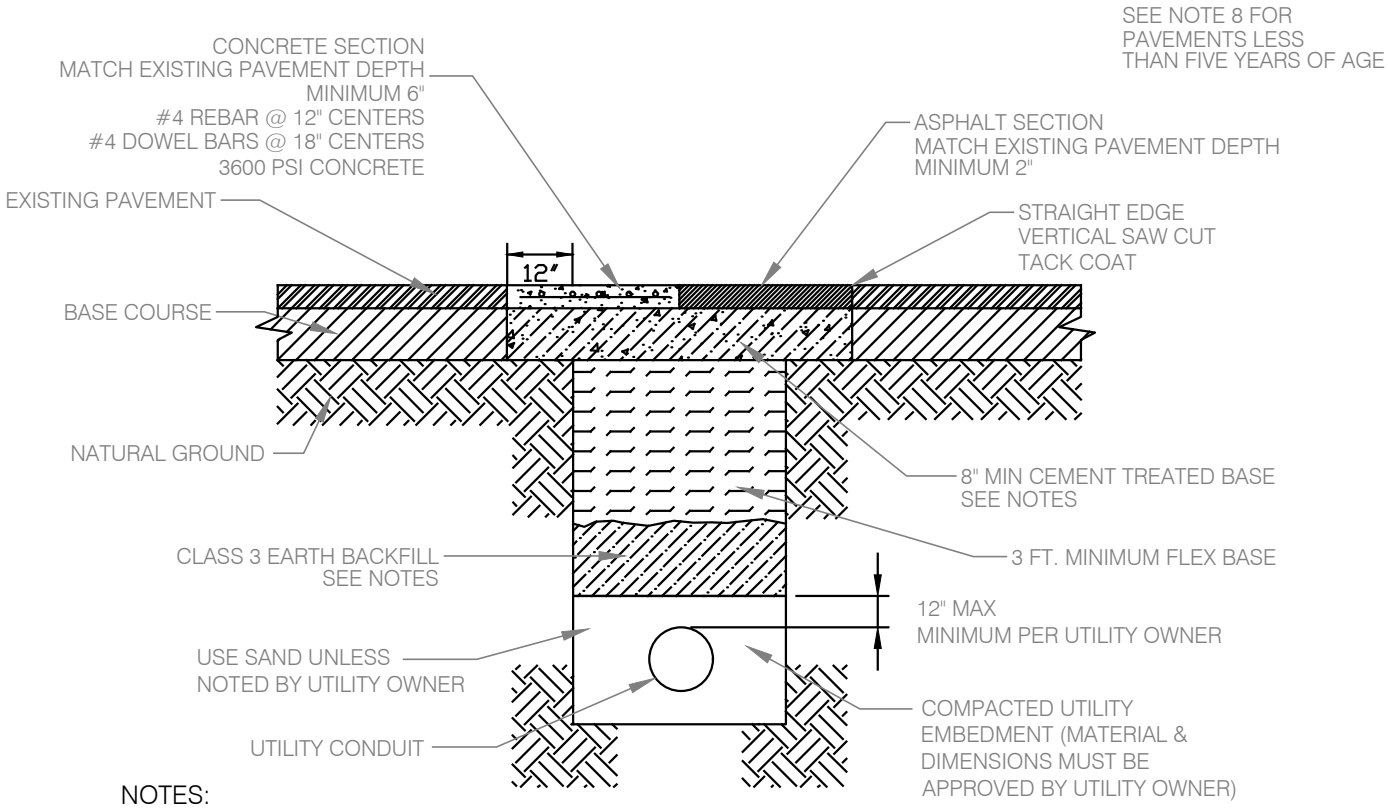

NOTES:

1. Utility owner or contractor is required to obtain a Right-of-Way (R.O.W.) Construction permit prior to any work within the public right-of-way including public alleyway and/or easements. All work within City of Weatherford R.O.W. shall be in accordance with Right of Way Ordinance 759-2016-05.
2. Traffic control plan (TCP) shall be submitted with R.O.W. Construction permit and no work shall start until R.O.W. permit is approved.
3. Cement Treated Base (CTB) shall consist of flexible base material with two sacks of cement type I/II per cubic yard mixed in a concrete mixer or transit mixed. CTB may be mixed on site with approval from Director of TPW or representative. CTB section shall be mechanically compacted.
4. Flexible base shall be per TXDOT item 247 and be mechanically compacted in 12-inch lifts.
5. Class 3 earth backfill shall meet the requirements of Type B backfill per N.C.T.C.O.G Public Works Construction Standards section 504.2.3.3 except for stone shall be less than three-inch diameter.
6. All material within the trench shall be mechanically compacted in lifts no more than 12-inches to 95% compaction per standard proctor. Compaction test report required for every 200 linear feet for each lift and at crossings designated by inspector. Submit compaction reports to TPW.
7. All permanent pavement repairs shall be rectangular and perpendicular or parallel to the roadway. Refer to N.C.T.C.O.G. Pavement Cut and Repair detail 3070C & 3070D for additional repair limits. All final pavement repairs shall be approved by TPW Director or representative.
8. For utility trenches on street pavements less than five years of age or greater than 80 Pavement Condition Index (PCI), refer to detail S2.3.
9. Temporary asphalt shall be placed over backfill until permanent asphalt patch is completed.
10. Final pavement repairs shall be completed within 21 days from completion of repair/work.
11. All work shall be per City specifications and N.C.T.C.O.G. Public Works Construction Standards and Specifications, latest edition.
12. Utility owner is responsible for final repairs and for any failures up to one year from final inspection of repair.
13. Contact TPW at 817-598-4234 for inspection of backfill and pavement repairs at least 24 hours from beginning work.

NOT TO SCALE

	DATE	TRANSPORTATION AND PUBLIC WORKS DEPARTMENT	SHEET. #
WEATHERFORD 1858 TRUE TEXAS	04/2020		S2.2
	DRAWN BY	TYPICAL UTILITY TRENCH SECTION PAVED AREAS	
	CITY OF WEATHERFORD		

ASPHALT STREET

ASPHALT PAVEMENT LESS THAN FIVE YEARS OF AGE OR IF PAVEMENT HAS A PAVEMENT CONDITION INDEX (PCI) EQUAL TO OR GREATER THAN 80

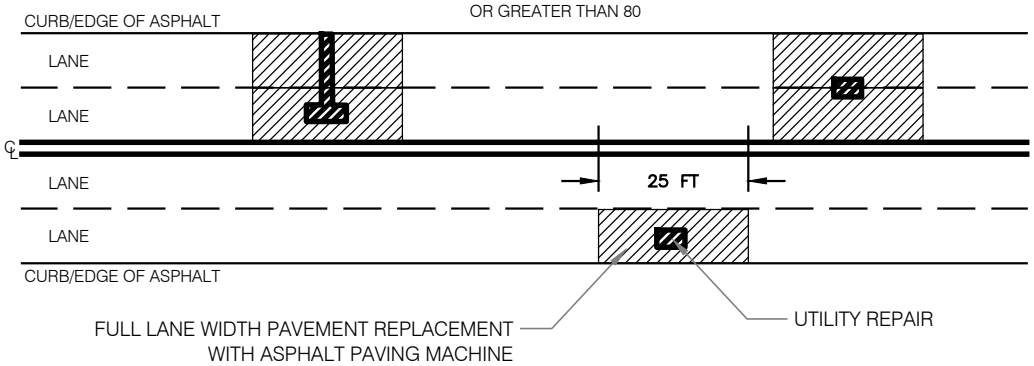

NOTES:

1. REPAIR AND BACKFILL UTILITY CUT PER CITY DETAIL S2.1.
2. PERMANENT ASPHALT REPLACEMENT SHALL BE PAVED WITH A PAVING MACHINE A MINIMUM OF 25 FEET BY THE WIDTH OF TRAVELING LANE OR AS APPROVED BY TPW DIRECTOR OR REPRESENTATIVE.
3. REMOVE AND REPLACE ASPHALT SURFACE PER N.C.T.C.O.G. SPECIFICATION SECTION 402.4.
4. ASPHALT SECTION SHALL MATCH EXISTING PAVEMENT THICKNESS OR MINIMUM 2 INCHES.
5. FINAL SURFACE MUST MEET A 16 FT STRAIGHT EDGE WITH A MAXIMUM ALLOWABLE DEVIATION OF $\frac{1}{4}$ INCH.
6. IF FOUR OR MORE PAVEMENT CUTS WITHIN THE SAME BLOCK, THEN THE ENTIRE BLOCK OR 600 FEET MAXIMUM, SHALL BE RESURFACED OR AS APPROVED BY TPW DIRECTOR OR REPRESENTATIVE. THIS ALSO APPLIES FOR TRENCHES OVER 100 LINEAR FEET WITH PERPENDICULAR TRENCHES. LONGITUDINAL TRENCHES WITHIN A TRAFFIC LANE MAY BE REPAIRED PER THIS DETAIL.
7. A DEPOSIT FOR PAVING IMPROVEMENTS WILL BE REQUIRED AT TIME OF PERMITTING PROCESS FOR GUARANTEE OF PERFORMANCE OR UTILITY OWNER MAY ESCROW THE DEPOSIT TO THE CITY FOR IMPROVEMENTS TO BE COMPLETED BY THE CITY OR ITS SUBCONTRACTORS.
8. FINAL PAVEMENT REPAIR SHALL BE COMPLETED WITHIN 45 DAYS FROM COMPLETION OF REPAIR/WORK OR AS APPROVED BY TPW DIRECTOR OR REPRESENTATIVE.
9. THIS DETAIL SHALL ONLY BE FOR COLLECTOR, ARTERIAL AND HIGH TRAFFIC STREETS GREATER THAN 1500 ADT.

CONCRETE STREET

CONCRETE PAVEMENT LESS THAN FIVE YEARS OF AGE OR IF PAVEMENT HAS A PAVEMENT CONDITION INDEX (PCI) EQUAL TO OR GREATER THAN 80

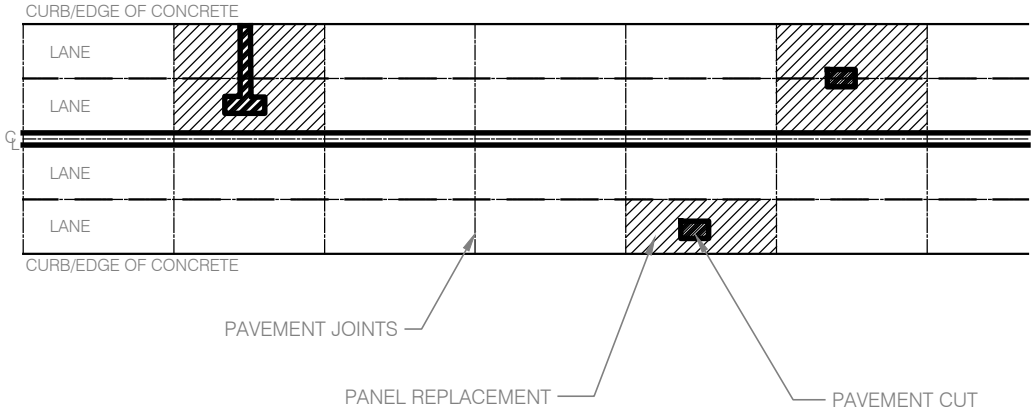

NOTES:

1. REPAIR AND BACKFILL UTILITY CUT PER CITY DETAIL S2.1.
2. REMOVE ENTIRE CONCRETE PAVEMENT PANEL AS SHOWN OR AS APPROVED BY TPW DIRECTOR OR REPRESENTATIVE.
3. REPLACE CONCRETE PANEL WITH 4,000 PSI WITH #4 REBAR AT 12 INCH O.C.E.W.
4. DOWEL 6" INTO EXISTING CONCRETE PAVEMENT WITH 24" LONG #4 REBAR AT 24" CENTERS.
5. CONCRETE SECTION SHALL MATCH EXISTING PAVEMENT THICKNESS OR MINIMUM 6 INCHES.
6. FINAL SURFACE MUST MEET A 12 FT STRAIGHT EDGE WITH A MAXIMUM ALLOWABLE DEVIATION OF $\frac{1}{4}$ INCH.
7. A DEPOSIT FOR PAVING IMPROVEMENTS WILL BE REQUIRED AT TIME OF PERMITTING PROCESS FOR GUARANTEE OF PERFORMANCE OR UTILITY OWNER MAY ESCROW THE DEPOSIT TO THE CITY FOR IMPROVEMENTS TO BE COMPLETED BY THE CITY OR ITS SUBCONTRACTORS.
8. FINAL PAVEMENT REPAIR SHALL BE COMPLETED WITHIN 30 DAYS FROM COMPLETION OF REPAIR/WORK OR AS APPROVED BY TPW DIRECTOR OR REPRESENTATIVE.

NOT TO SCALE

	DATE	TRANSPORTATION AND PUBLIC WORKS DEPARTMENT	SHEET. #
1858 WEATHERFORD TRUE TEXAS	09/2020		S2.3
	DRAWN BY	PAVEMENT CUT & REPAIR FOR NEW STREETS	
	CITY OF WEATHERFORD		

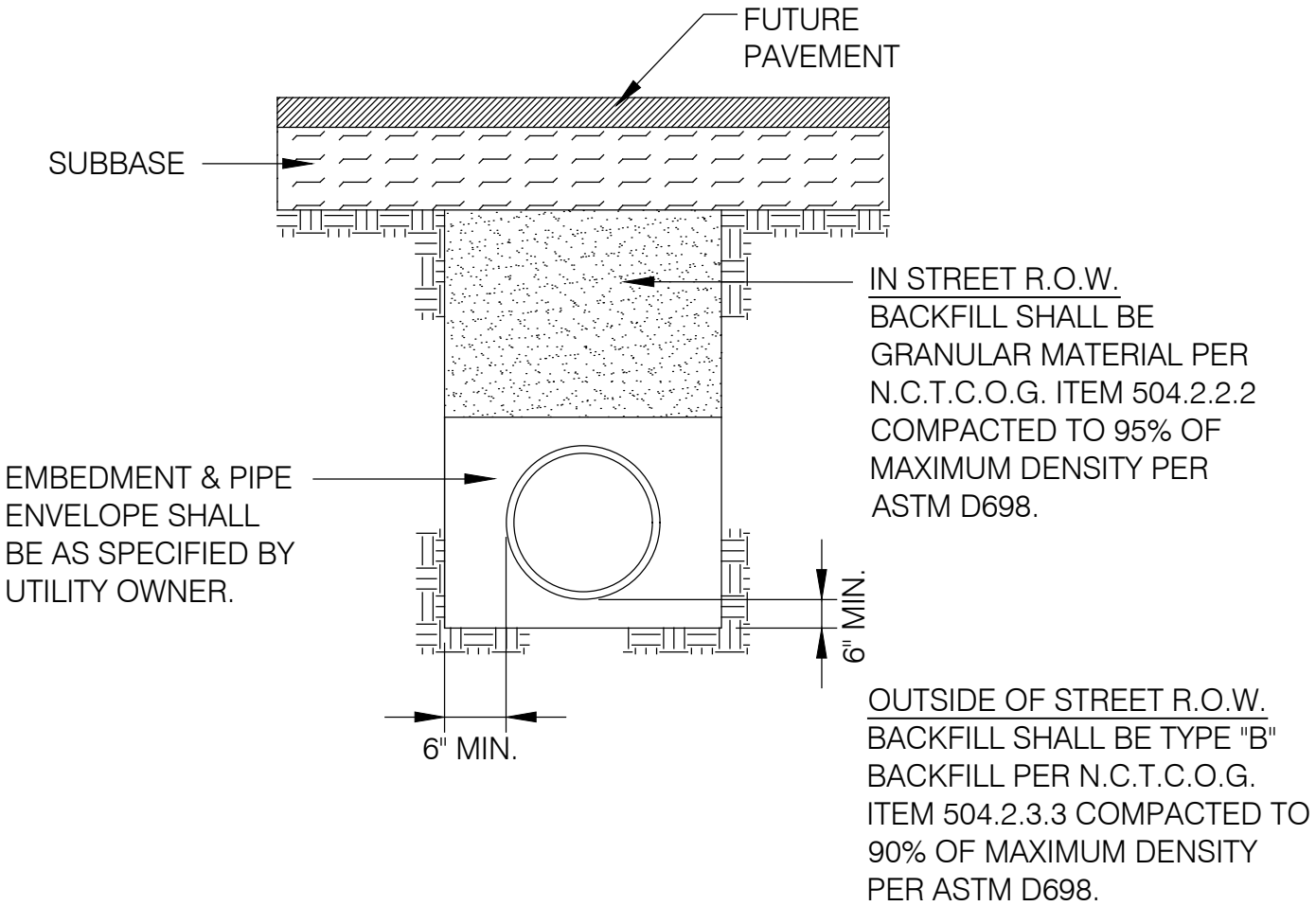

1 TRENCH BACKFILL DETAIL

NOT TO SCALE

NOTES:

1. ITEM NUMBERS REFER TO N.C.T.C.O.G. "STANDARD SPECIFICATIONS FOR PUBLIC WORKS CONSTRUCTION" 4TH EDITION.
2. COMPACTION METHOD FOR TRENCH BACKFILL SHALL BE PER N.C.T.C.O.G. ITEM 504.5.3 THRU 504.5.3.3.
3. DENSITIES REQUIRED FOR EVERY 200 LINEAR FEET OF TRENCH PER LIFT AND AT CROSSINGS DESIGNATED BY FIELD SERVICES INSPECTOR.

	DATE	TRANSPORTATION AND PUBLIC WORKS DEPARTMENT	SHEET. #
1858 WEATHERFORD TRUE TEXAS	01/2020		S3
	DRAWN BY	TRENCH BACKFILL DETAIL	
	CITY OF WEATHERFORD		

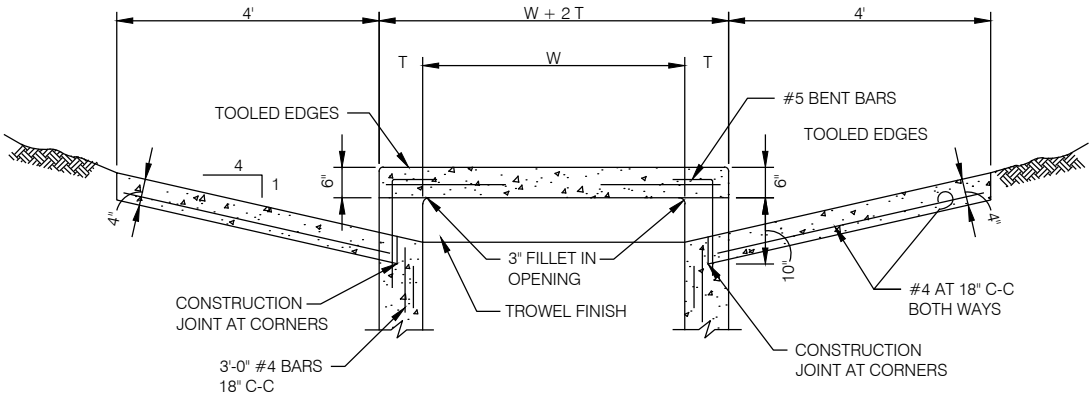

2 SECTION "A-A"

NOT TO SCALE

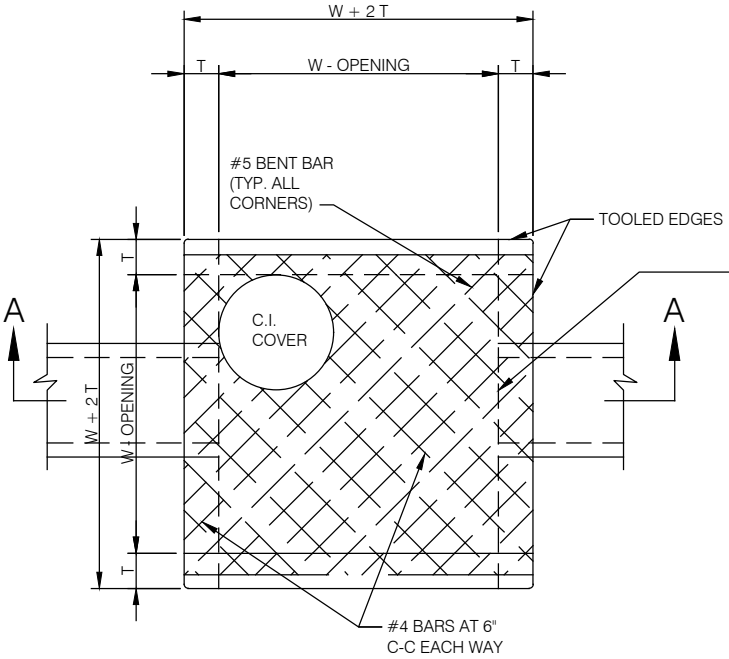

INLET SIZE	T	W
* 2' SQUARE	7"	2'-0"
4' SQUARE	7"	4'-0"
5' SQUARE	8"	5'-0"
6' SQUARE	9"	6'-0"

* DROP INLET DEEPER THAN 3' (OUTSIDE TOP TO FLOWLINE) SHALL BE MINIMUM 4' SQUARE.

1 PLAN OF TOP SLAB

NOT TO SCALE

NOTES:

1. MATERIAL AND WORKMANSHIP SHALL CONFORM WITH THE REQUIREMENTS OF N.C.T.C.O.G. STANDARD SPECIFICATIONS FOR STANDARD CONCRETE MANHOLES. MINIMUM CLASS "A" CONCRETE.
2. LAYERS OF REINFORCING STEEL NEAREST THE INTERIOR AND EXTERIOR SURFACES SHALL HAVE A COVER OF 2" TO THE CENTER OF BARS. UNLESS OTHERWISE NOTED.
3. FOR DETAILS OF REINFORCING OF LOWER PORTIONS OF INLET SEE APPROPRIATE SQUARE MANHOLE DETAILS.
4. DEPTH OF DROP INLET FROM FINISHED GRADE TO FLOW LINE OF INLET IS VARIABLE. APPROXIMATE DEPTH WILL BE SHOWN ON PLANS AT LOCATION OF INLET.
5. ALL STANDARD DROP INLETS SHALL HAVE ONE OPENING ON EACH SIDE UNLESS OTHERWISE SHOWN ON PLANS.
6. DECK MAY BE REINFORCED SAME AS 4' SQUARE MANHOLE.
7. MANHOLES OVER 3' DEPTH SHALL HAVE STEPS. STEP DETAILS AVAILABLE THROUGH TPW.

	DATE	TRANSPORTATION AND PUBLIC WORKS DEPARTMENT	SHEET. #
1858 WEATHERFORD TRUE TEXAS	01/2020		S4
	DRAWN BY	DROP INLET 2', 4', 5' OR 6' SQUARE	
	CITY OF WEATHERFORD		

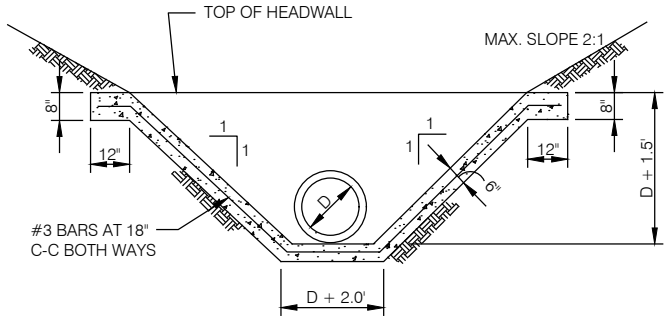

3 SECTION "B-B"

NOT TO SCALE

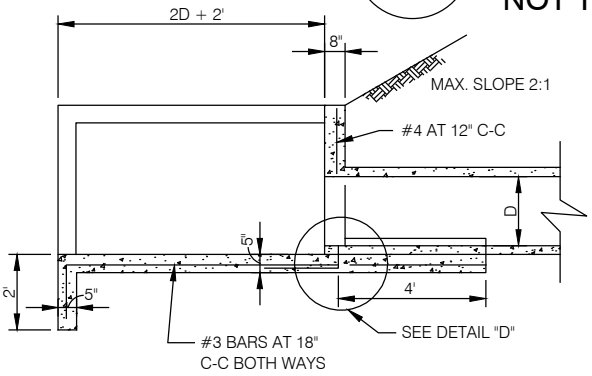

2 SECTION "A-A"

NOT TO SCALE

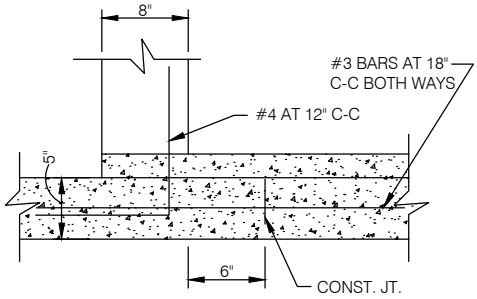

4 DETAIL "D"

NOT TO SCALE

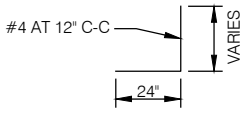

5 BAR DETAIL

NOT TO SCALE

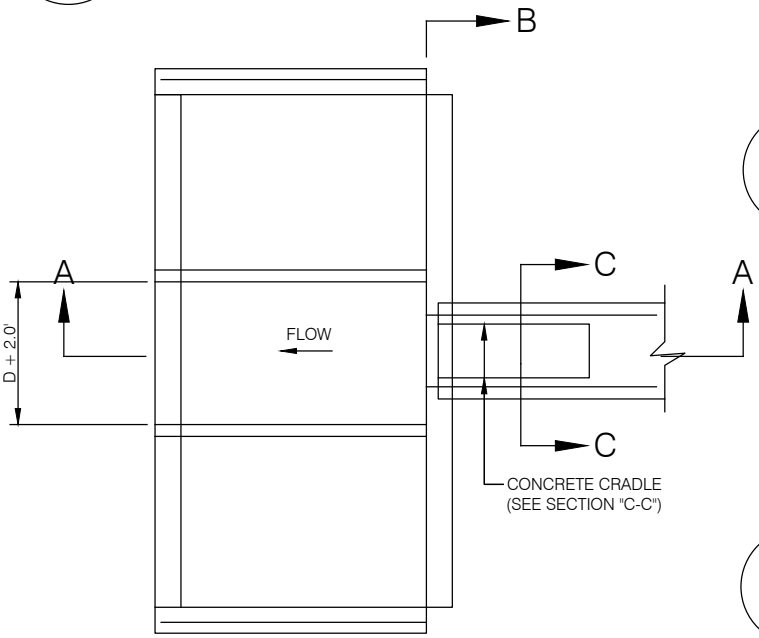

1 PLAN

NOT TO SCALE

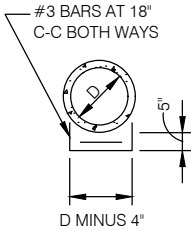

6 SECTION "C-C"

NOT TO SCALE

NOTE:
1. CONCRETE SHALL BE CLASS "A".

	DATE	TRANSPORTATION AND PUBLIC WORKS DEPARTMENT	SHEET. #
WEATHERFORD 1858 TRUE TEXAS	01/2020		S5
	DRAWN BY	CONCRETE APRON VERTICAL HEADWALL	
	CITY OF WEATHERFORD		

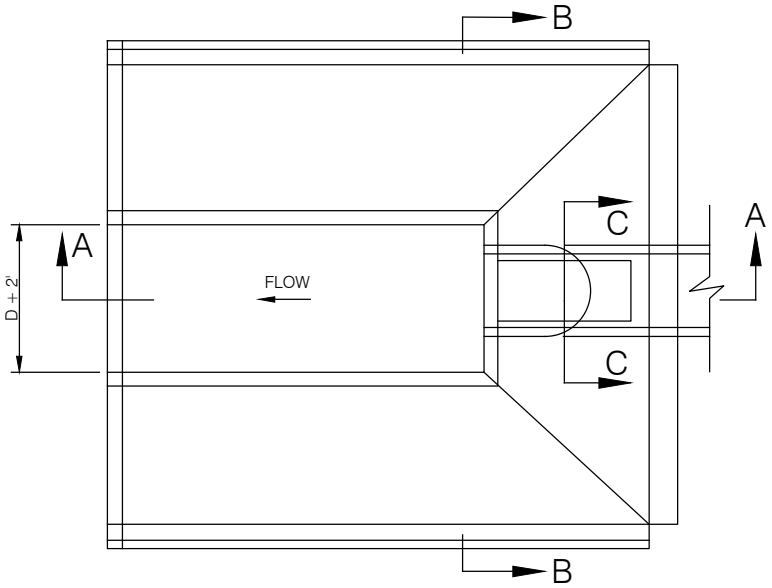

1 PLAN

NOT TO SCALE

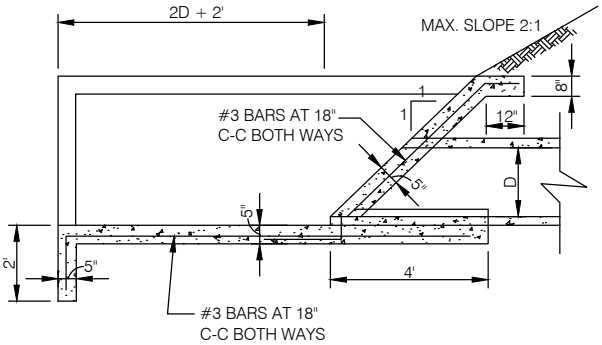

2 SECTION "A-A"

NOT TO SCALE

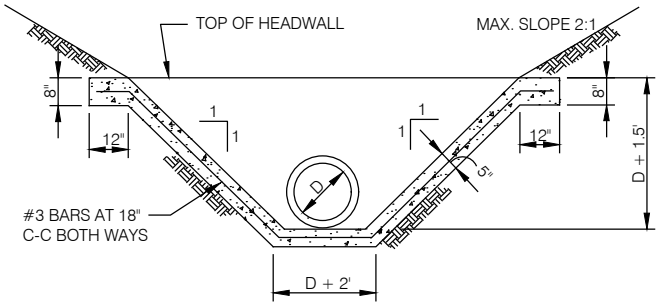

3 SECTION "B-B"

NOT TO SCALE

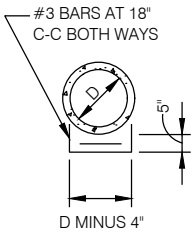

4 SECTION "C-C"

NOT TO SCALE

NOTE:
1. CONCRETE SHALL BE CLASS "A".

	DATE	TRANSPORTATION AND PUBLIC WORKS DEPARTMENT	SHEET. #
WEATHERFORD 1858 TRUE TEXAS	01/2020		S6
	DRAWN BY	CONCRETE APRON SLOPING HEADWALL	
	CITY OF WEATHERFORD		

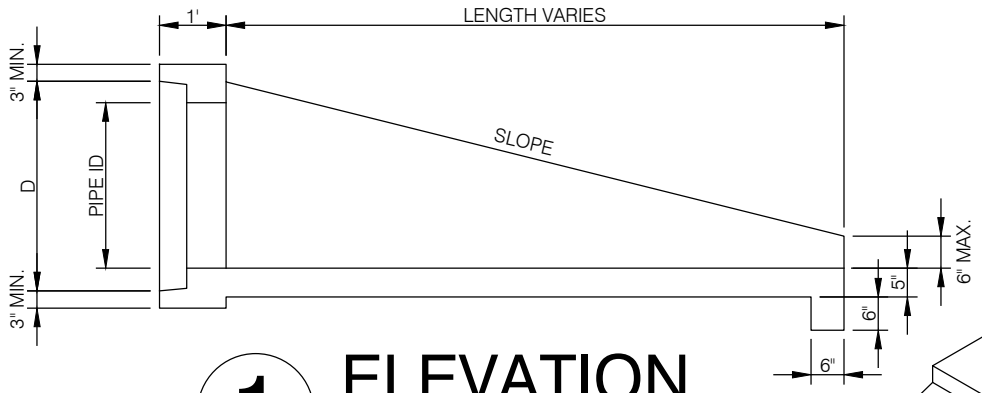

1 ELEVATION

NOT TO SCALE

NOTES:
1. 4500 PSI CONCRETE.
2. #4 GRADE 60 REBAR 9" O.C.E.W.
3. ALL EXPOSED CORNERS ARE CHAMFERED 3/4".
4. SWIFT LIFT ANCHORS, LOCATED IN THE FLOOR, SHALL BE USED FOR HANDLING.
5. GALVANIZED STEEL PIPE RUNNERS ARE AVAILABLE FOR CROSS AND PARALLEL DRAINAGE APPLICATIONS.

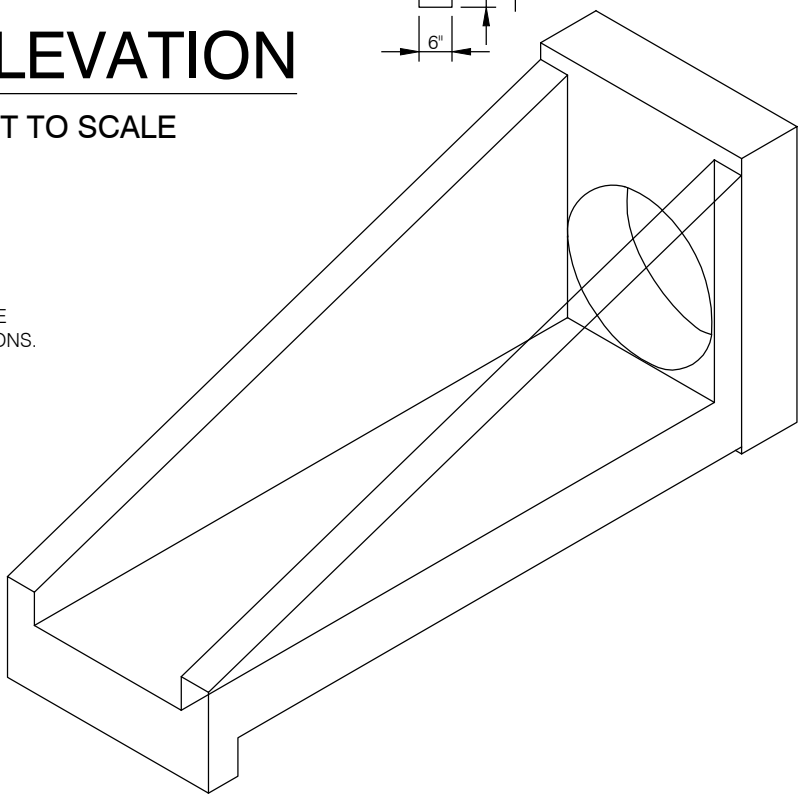

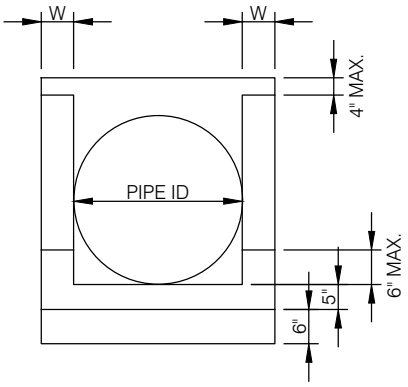

2 FRONT ELEVATION

NOT TO SCALE

PIPE ID	PIPE OD	SLOPE	D	W
18"	23"	3:1	24"	5"
		4:1		
		6:1		
24"	30"	3:1	31"	5"
		4:1		
		6:1		

PIPE ID	PIPE OD	SLOPE	D	W
30"	37"	3:1	38"	6"
		4:1		
		6:1		
36"	44"	3:1	45-1/2"	6"
		4:1		
		6:1		
42"	51"	3:1	52-3/4"	6"
		4:1		
		6:1		
48"	58"	3:1	60"	8"
		4:1		
54"	65"	3:1	67"	8"

	DATE	TRANSPORTATION AND PUBLIC WORKS DEPARTMENT	SHEET. #
WEATHERFORD 1858 TRUE TEXAS	01/2020		S7
	DRAWN BY	STANDARD STORM SEWER CULVERT W/SAFETY END TREATMENTS	
	CITY OF WEATHERFORD		

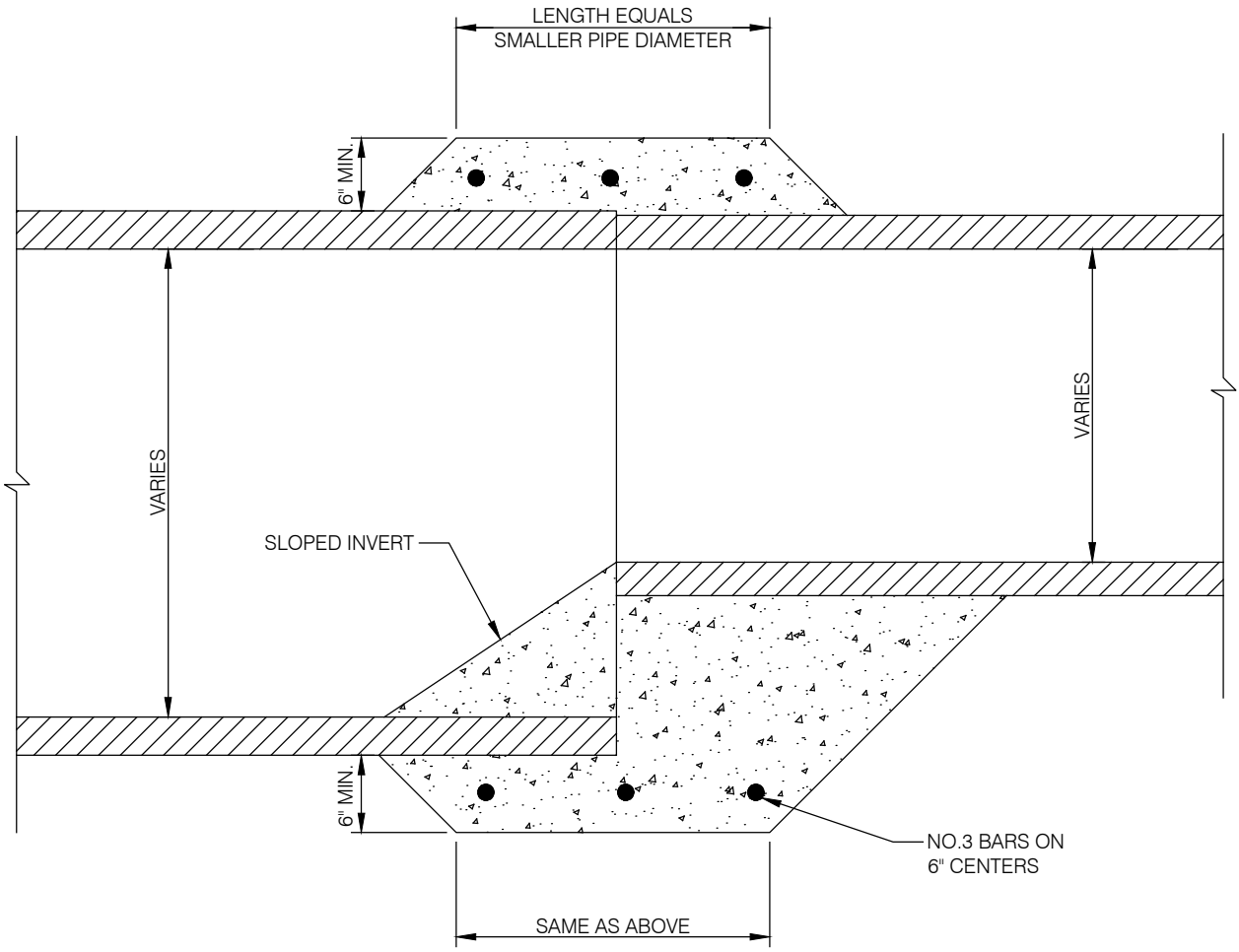

1 PIPE COLLAR DETAIL

NOT TO SCALE

NOTES:

1. THIS PROCEDURE/DETAIL WILL ONLY BE USED WHEN A PREFAB REDUCTION IS NOT POSSIBLE.
2. CONCRETE FOR COLLAR WILL NOT BE PAID FOR DIRECTLY, BUT WILL BE CONSIDERED SUBSIDIARY TO THE VARIOUS OTHER BIDS.
3. CONCRETE SHALL BE 5 SACK 3000 PSI.

	DATE	TRANSPORTATION AND PUBLIC WORKS DEPARTMENT	SHEET. #
1858 WEATHERFORD TRUE TEXAS	01/2020		S8
	DRAWN BY	PIPE COLLAR DETAIL	
	CITY OF WEATHERFORD		

* MAXIMUM DIAMETER OF NEW PIPE EQUALS ONE HALF OF EXISTING PIPE'S DIAMETER.

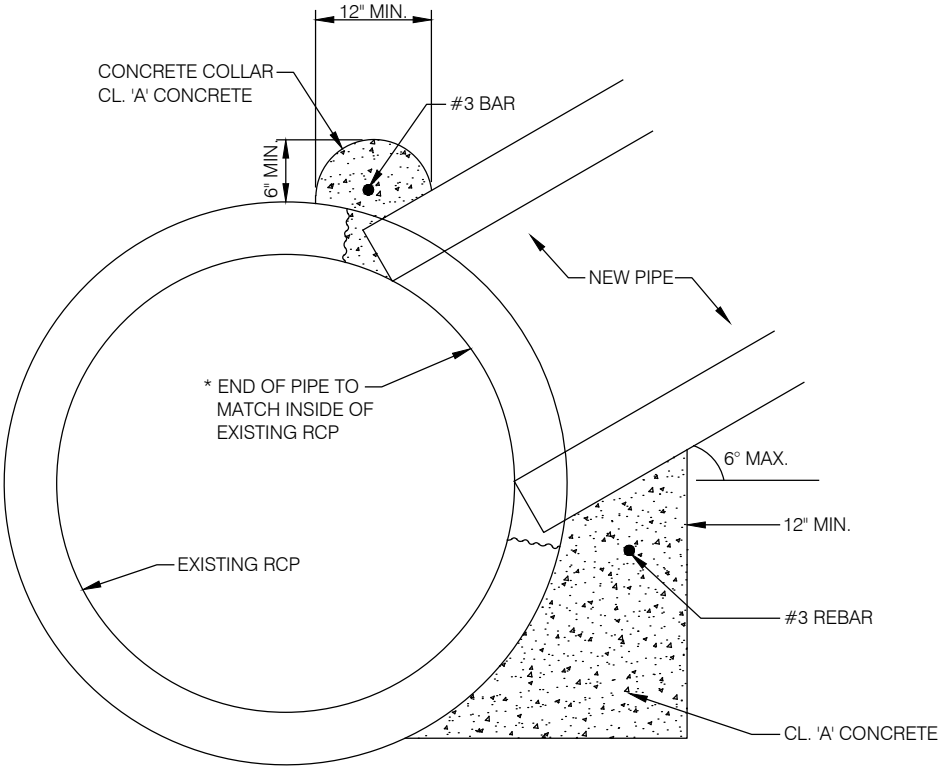

* REMOVAL OF PLUG FROM EXISTING RCP TO BE ACCOMPLISHED BY USING A MASONRY DRILL AT A SPACING EQUAL TO THE DRILL BIT DIAMETER IN A CIRCULAR PATTERN OR A MASONRY SAW IN AN OCTAGONAL PATTERN PER DETAIL.

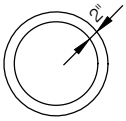

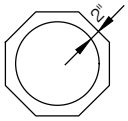

1

STORM DRAIN CONNECTION TO EXISTING RCP

NOT TO SCALE

	DATE	TRANSPORTATION AND PUBLIC WORKS DEPARTMENT	SHEET. #
WEATHERFORD 1858 TRUE TEXAS	01/2020		S9
	DRAWN BY	STORM DRAIN CONNECTION TO EXISTING RCP	
	CITY OF WEATHERFORD		

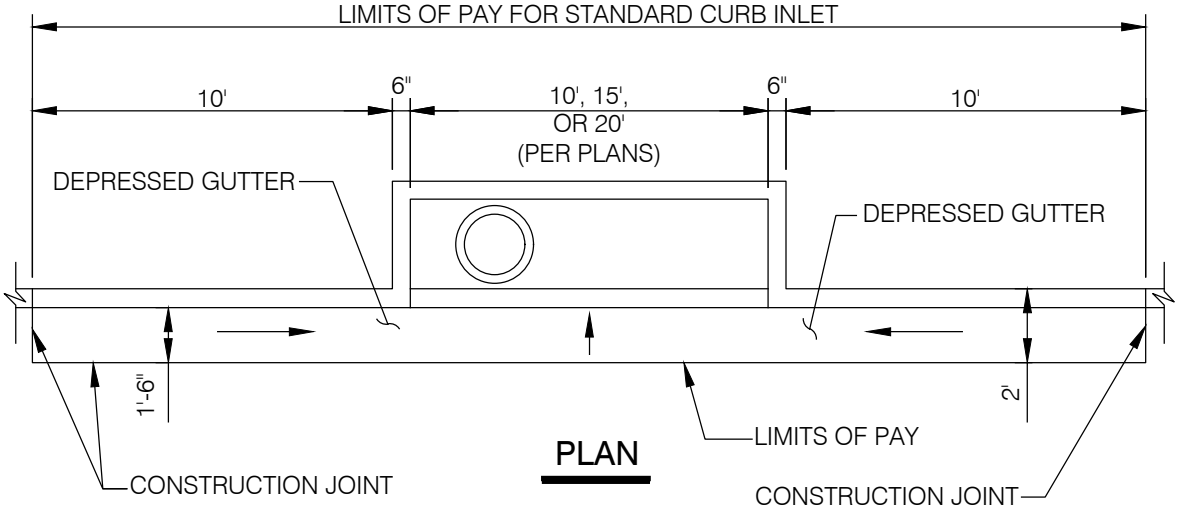

PLAN

NOTES:

1. TOP OF INLET TO SLOPE 2% TOWARDS STREET OR PER PLAN
2. CENTER SUPPORT BEAM REQUIRED FOR 15' AND 20' STANDARD CURB INLETS.
3. ADDITIONAL REINFORCING STEEL TO BE PLACED AROUND MANHOLE OPENING.

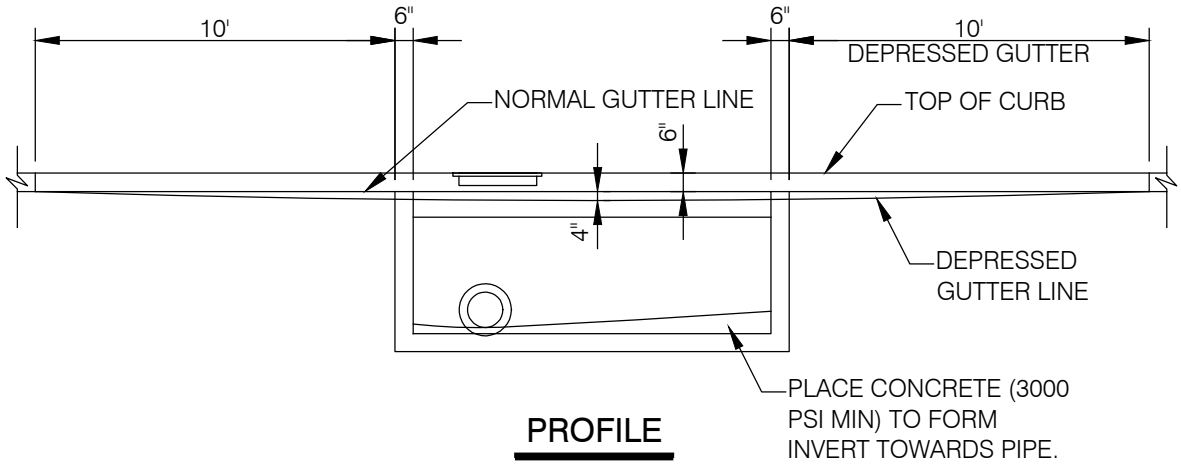

PROFILE

NOTES:

1. MANHOLE TO BE PLACED AT LOW END OF INLET. TWO MANHOLES ARE REQUIRED ON 15' AND 20' INLETS.

1 STANDARD CURB INLET

NOT TO SCALE

	DATE	TRANSPORTATION AND PUBLIC WORKS DEPARTMENT	SHEET. #
WEATHERFORD 1858 TRUE TEXAS	01/2020		S10
	DRAWN BY	STANDARD CURB INLET	
	CITY OF WEATHERFORD		

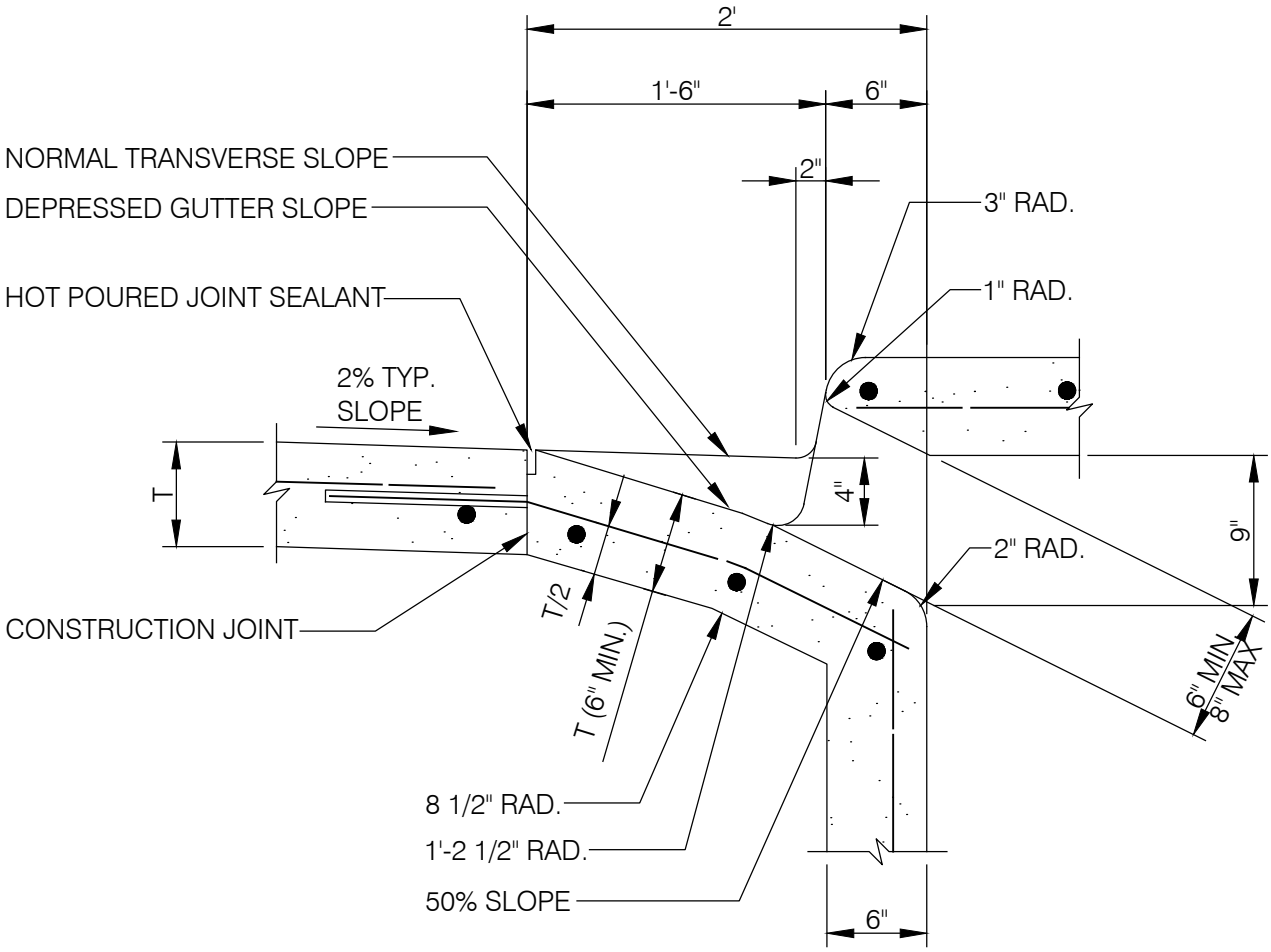

THROAT SECTION

1

STANDARD CURB INLET

NOT TO SCALE

	DATE	TRANSPORTATION AND PUBLIC WORKS DEPARTMENT	SHEET. #
WEATHERFORD 1858 TRUE TEXAS	01/2020		S11
	DRAWN BY	STANDARD CURB INLET	
	CITY OF WEATHERFORD		

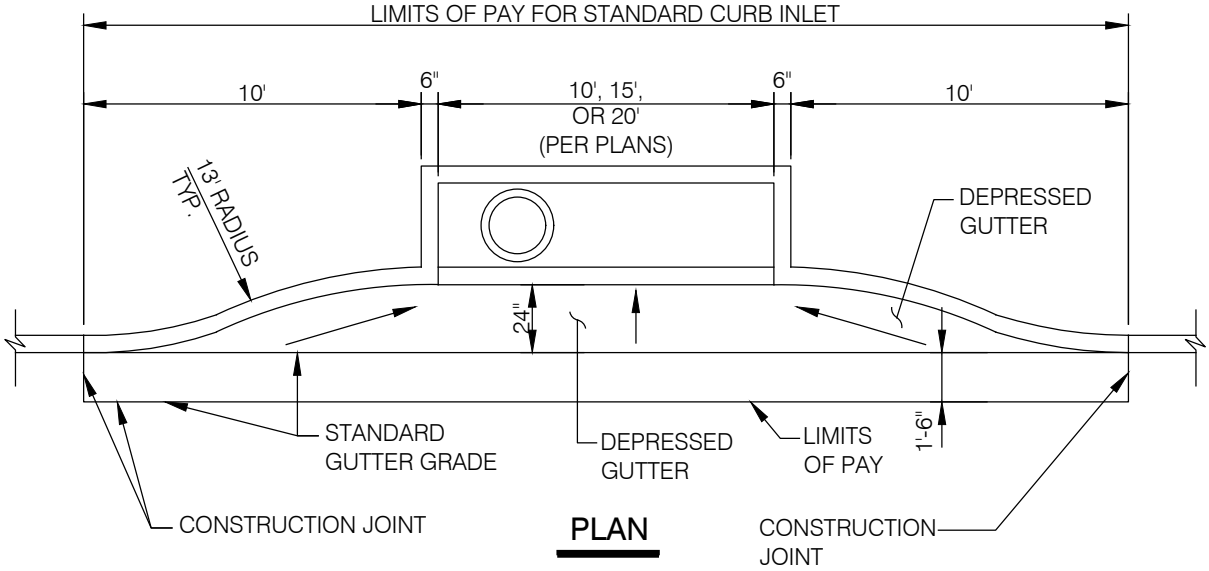

PLAN

NOTES:

1. TOP OF INLET TO SLOPE 2% TOWARDS STREET OR PER PLAN.
2. CENTER SUPPORT BEAM REQUIRED FOR 15' AND 20' STANDARD CURB INLETS.
3. ADDITIONAL REINFORCING STEEL TO BE PLACED AROUND MANHOLE OPENING.

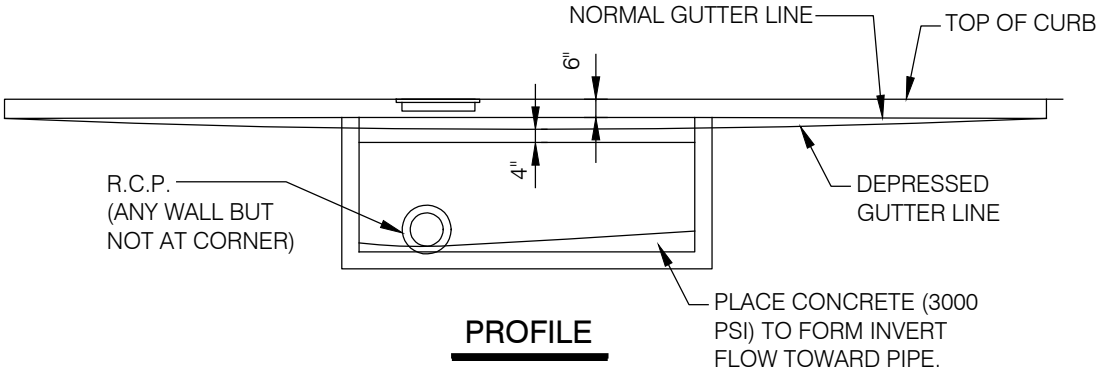

PROFILE

NOTES:

1. MANHOLE TO BE PLACED AT LOW END OF INLET. TWO MANHOLES ARE REQUIRED ON 15' AND 20' INLETS.

1 RECESSED CURB INLET

NOT TO SCALE

	DATE	TRANSPORTATION AND PUBLIC WORKS DEPARTMENT	SHEET. #
WEATHERFORD 1858 TRUE TEXAS	01/2020		S12
	DRAWN BY	RECESSED CURB INLET	
	CITY OF WEATHERFORD		

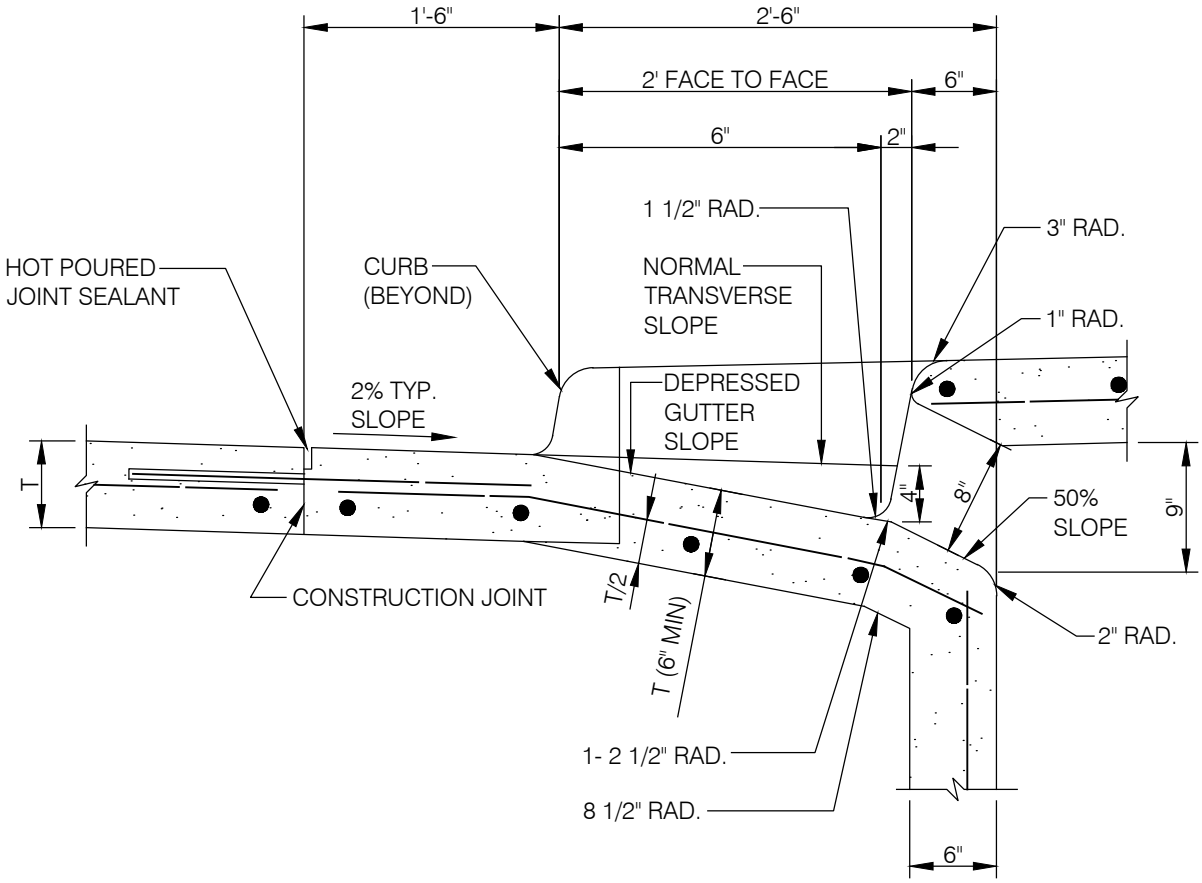

THROAT SECTION

1 RECESSED CURB INLET

NOT TO SCALE

	DATE	TRANSPORTATION AND PUBLIC WORKS DEPARTMENT	SHEET. #
WEATHERFORD 1858 TRUE TEXAS	01/2020		S13
	DRAWN BY	RECESSED CURB INLET	
	CITY OF WEATHERFORD		

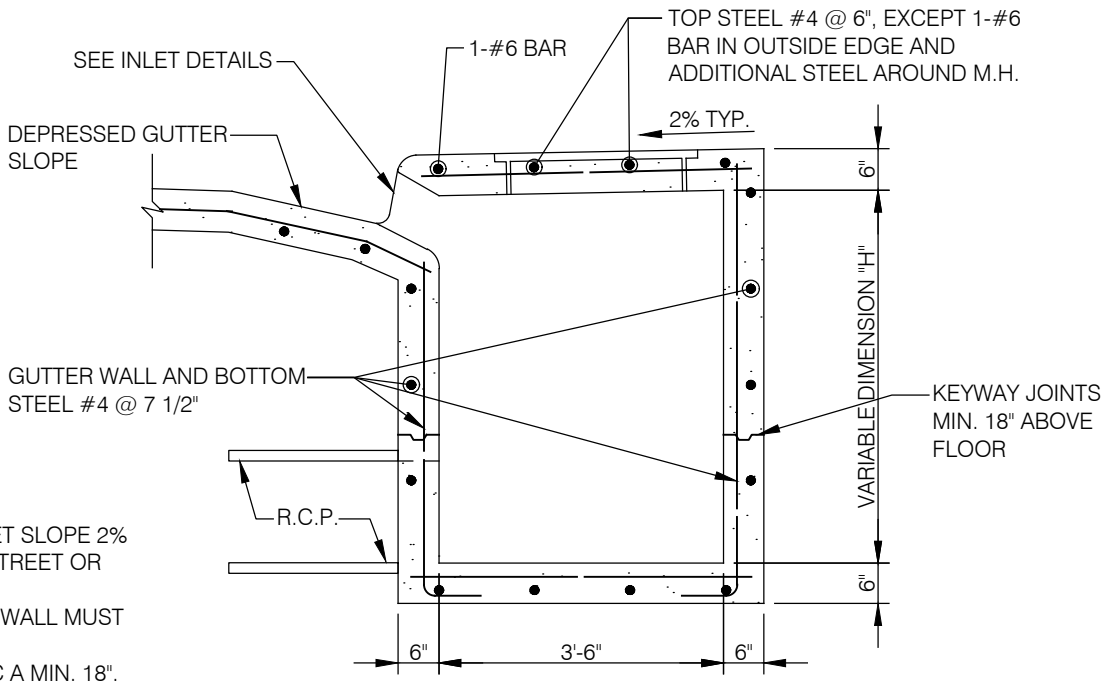

NOTE:
1. TOP OF INLET SLOPE 2% TOWARDS STREET OR PER PLAN.
2. FLOOR AND WALL MUST BE POURED MONOLITHIC A MIN. 18".

INLET SECTION FOR RECESSED AND STANDARD INLETS

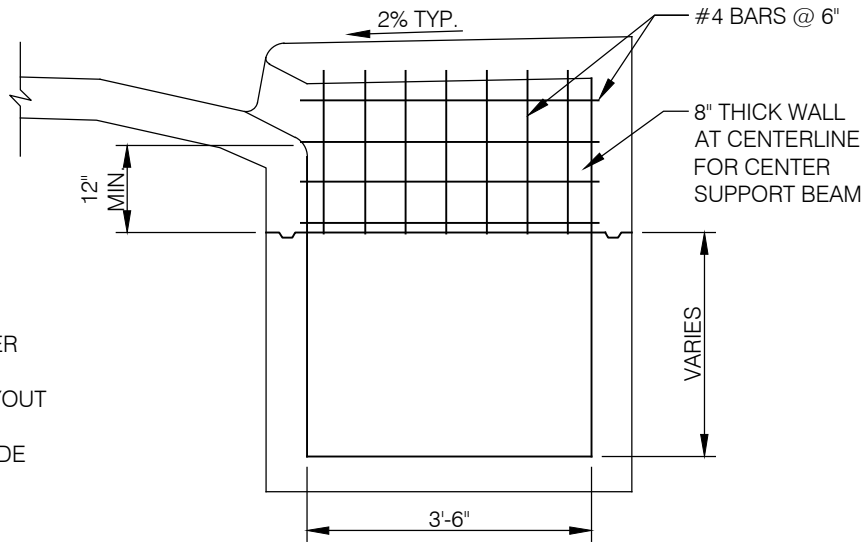

NOTE:
1. TOP OF INLET SLOPE 2% TOWARDS STREET OR PER PLAN.
2. REINFORCING STEEL LAYOUT APPLICABLE TO BOTH RECESSED AND ON-GRADE CURB INLETS.

CENTER SUPPORT BEAM FOR 15' & 20' RECESSED AND STANDARD INLETS

1 CENTER SUPPORT BEAM AND INLET SECTION

NOT TO SCALE

	DATE	TRANSPORTATION AND PUBLIC WORKS DEPARTMENT	SHEET. #
WEATHERFORD 1858 TRUE TEXAS	01/2020		S14
	DRAWN BY	CENTER SUPPORT BEAM AND INLET SECTION FOR RECESSED AND STANDARD INLETS	
	CITY OF WEATHERFORD		

GENERAL NOTES:

1. ALL CONCRETE SHALL BE CLASS A.
2. ALL REINFORCING STEEL SHALL BE NEW BILLET STEEL CONFORMING TO ASTM A-615 AND AMERICAN MADE.
3. CHAMFER ALL EXPOSED CORNERS 3/4" EXCEPT WHERE OTHERWISE NOTED.
4. DIMENSIONS RELATING TO REINFORCING STEEL ARE TO CENTER OF BARS.
5. FIELD CUT AND BEND BARS AS NECESSARY TO ACCOMMODATE STORM SEWER PIPE.
6. ALL REINFORCING STEEL SHALL HAVE A MINIMUM COVER OF 2".
7. ROCK FOUNDATION SHALL BE USED DURING PREFABRICATED INLET BOX INSTALLATION. 6" FOR BACKFILL WITH FLOWABLE FILL TO FILL VOIDS OR COMPACT WITH SELECT SURPLUS EXCAVATION COMPACTED IN 8" LIFTS TO 95% STANDARD PROCTOR DENSITY.
8. STANDARD CURB INLET SIZES ARE 10', 15', OR 20'. NO OTHER SIZES WILL BE ALLOWED WITHOUT APPROVAL FROM DIRECTOR OF T.P.W.
9. MANHOLE RING SHALL BE CHAINED TO RING.
10. MANHOLES AND CURB INLETS DEEPER THAN 3' SHALL HAVE STEPS. CONTACT TPW FOR STEP DETAILS.

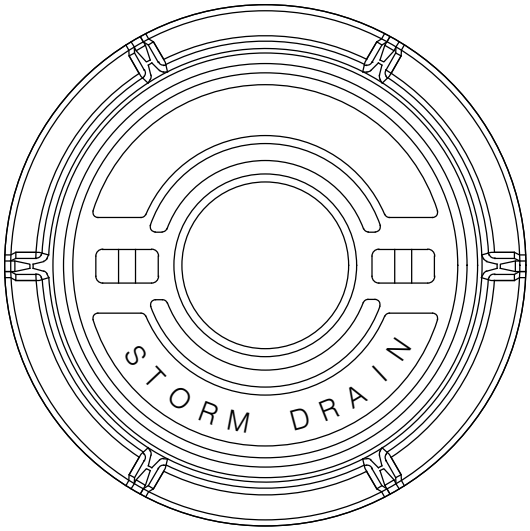

INLET LID DETAL

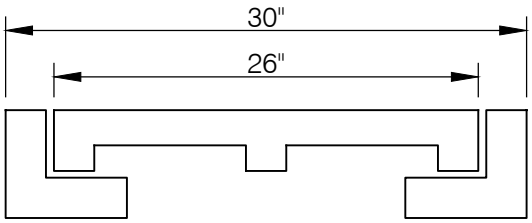

CAST IRON FRAME AND COVER

1 INLET LID

NOT TO SCALE

	DATE	TRANSPORTATION AND PUBLIC WORKS DEPARTMENT	SHEET. #
WEATHERFORD 1858 TRUE TEXAS	01/2020		S15
	DRAWN BY	INLET LID DETAIL AND GENERAL NOTES	
	CITY OF WEATHERFORD		

WEATHERFORD 1858 TRUE TEXAS

DATE	DRAWN BY
01/2020	CITY OF WEATHERFORD

TRANSPORTATION AND PUBLIC WORKS DEPARTMENT

TYPE II CURB INLET UNDER PAVEMENT

SHEET. # S16

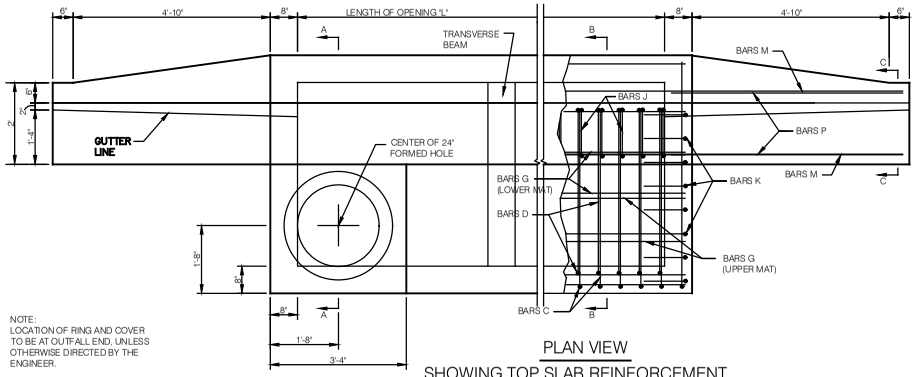

NOTE:
LOCATION OF RING AND COVER TO BE AT OUTFALL END, UNLESS OTHERWISE DIRECTED BY THE ENGINEER.

PLAN VIEW
SHOWING TOP SLAB REINFORCEMENT

THROAT DIMENSION	
CURB HEIGHT	'X'
5"	8"
6"	5 7/8"
7"	6 1/4"
8"	6 1/2"

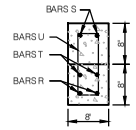

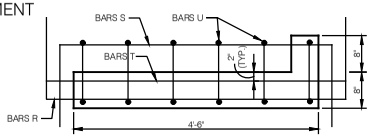

TRANSVERSE BEAM DETAIL
BEAMS AT 5' C-C (10', 15' & 20' INLETS)

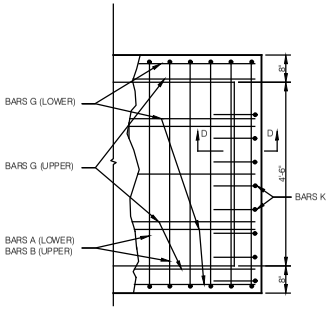

PARTIAL PLAN VIEW
SHOWING BOTTOM SLAB REINFORCEMENT

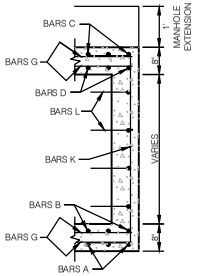

SECTION "D-D"

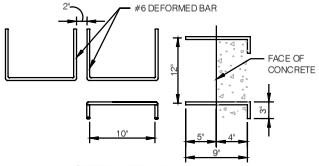

STEP DETAIL

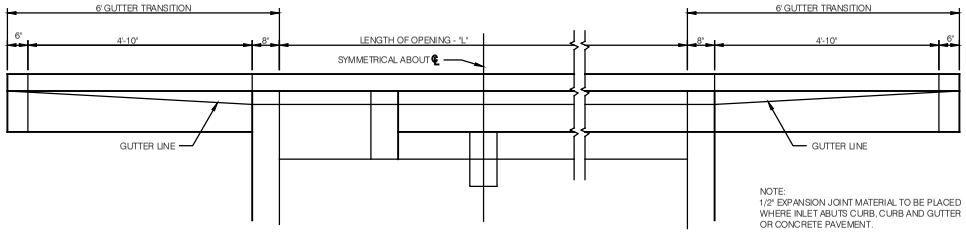

FRONT ELEVATION VIEW

NOTE:
1/2" EXPANSION JOINT MATERIAL TO BE PLACED WHERE INLET ABUTS CURB, CURB AND GUTTER OR CONCRETE PAVEMENT.

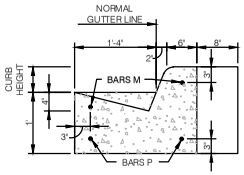

SECTION "C-C"

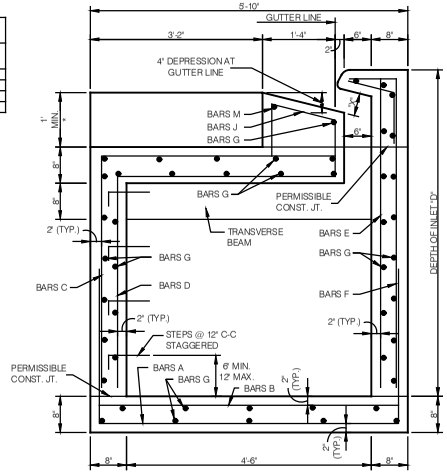

SECTION "B-B"

* MATCH DEPTH OF PAVEMENT STRUCTURE (BASE AND SURFACE). ADJUST BAR LENGTHS AS DIRECTED BY THE ENGINEER. (SEE DETAIL, SHEET 22B)

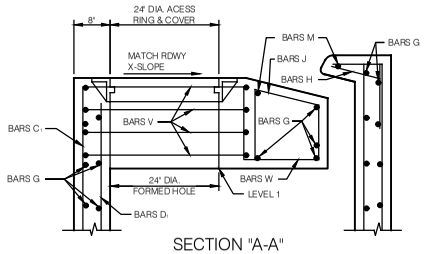

SECTION "A-A"

NOTE:
SEE SHEET 22B FOR DETAILS OF RING AND COVER, REINFORCING STEEL, ESTIMATED QUANTITIES, AND GENERAL NOTES.

SHEET. #
S16

WEATHERFORD 1858 TRUE TEXAS

CITY OF WEATHERFORD

DATE 01/2020

DRAWN BY

TRANSPORTATION AND PUBLIC WORKS DEPARTMENT

TYPE II CURB INLET UNDER PAVEMENT

SHEET. # S17

BILL OF REINFORCING STEEL FOR INLET DEPTH OF 6'

LENGTH OF OPENING	#5 BARS A @ 6'		#5 BARS B @ 6'		#5 BARS C @ 6'		#5 BARS C1 @ 6'		#5 BARS D @ 6'		#5 BARS D1 @ 6'		#5 BARS E @ 6'		#5 BARS F @ 6'		#4 BARS G			#4 BARS H @ 12'		#4 BARS J @ 12'		#4 BARS K @ 7'		#4 BARS L @ 12'		#4 BARS M			#4 BARS P		#6 BARS R		#6 BARS S		#6 BARS T		#4 BARS U @ 10'		#4 BARS V @ 5'		#4 BARS W	
	NO.	WT.	NO.	WT.	NO.	WT.	NO.	WT.	NO.	WT.	NO.	WT.	NO.	WT.	NO.	WT.	NO.	LENGTH	WT.	NO.	WT.	NO.	WT.	NO.	WT.	NO.	WT.	NO.	LENGTH	WT.	NO.	WT.	NO.	WT.	NO.	WT.	NO.	WT.	NO.	WT.	NO.	WT.	NO.	WT.	NO.	WT.
5'	13	151	13	75	6	54	7	38	6	56	7	35	13	77	13	88	46	6'	184	7	9	7	15	16	73	8	50	2	16'-8"	22	4	15	0	0	0	0	0	0	0	0	4	35	6	11
10'	23	268	23	132	16	143	7	38	16	149	7	35	23	136	23	156	46	11'	338	12	15	12	26	16	73	8	50	2	21'-8"	29	4	15	2	26	2	24	2	17	6	13	4	35	6	11
15'	33	384	33	189	26	233	7	38	26	242	7	35	33	195	33	224	46	16'	492	17	21	17	37	16	73	8	SW	2	26'-8"	36	4	15	4	51	4	48	4	33	12	25	4	35	6	11
20'	43	501	43	247	36	322	7	38	36	335	7	35	43	254	43	292	46	21'	642	22	27	22	48	16	73	8	50	2	31'-8"	42	4	15	6	77	6	72	6	50	18	38	4	35	6	11

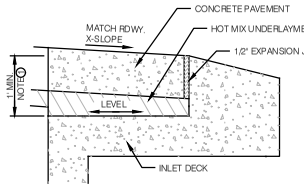

1 THICKNESS OF CONCRETE PAVEMENT PLUS HOT MIX UNDERLAYMENT; IF LESS THAN 1'-0", INCREASE DEPTH OF HOT MIX UNDERLAYMENT.

INLET ADJACENT TO CONCRETE PAVEMENT

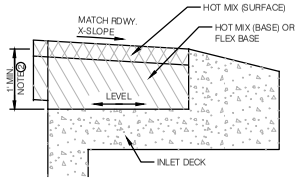

2 THICKNESS OF HOT MIX (SURFACE) PLUS HOT MIX (BASE) OR FLEX BASE. IF LESS THAN 1'-0", INCREASE DEPTH OF HOT MIX (BASE) OR FLEX BASE OVER INLET DECK.

MAXIMUM THICKNESS = 1'-6"

DO NOT PLACE LESS THAN 4" LIFT OF FLEX BASE

INLET ADJACENT TO HOT MIX PAVEMENT

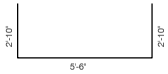

#5 BARS "A"

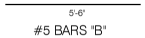

#5 BARS "B"

#5 BARS "C1"

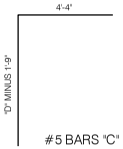

#5 BARS "C"

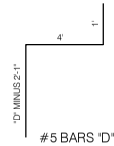

#5 BARS "D"

#5 BARS "D1"

#5 BARS "E"

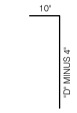

#5 BARS "F"

#4 BARS "G"

BAR SPACING:
BOTTOM SLAB, LOWER MAT - 1'-4"
BOTTOM SLAB, UPPER MAT - 1'-2"
BACK WALL, OUTER MAT - 0'-9'
BACK WALL, INNER MAT - 0'-10"
FRONT WALL, OUTER MAT - 0'-9"
FRONT WALL, INNER MAT - 0'-10"
UPPER SLAB, LOWER MAT - 1'-0"
UPPER SLAB, UPPER MAT - 1'-0 3/4"
GUTTER - PLACE AS SHOWN

#4 BARS "H"

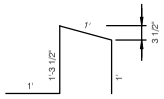

#4 BARS "J"

#4 BARS "K"

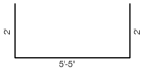

#4 BARS "L"

#4 BARS "U"

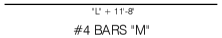

#4 BARS "M"
PLACE AS SHOWN

#4 BARS "P"
PLACE AS SHOWN

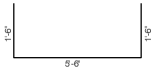

#6 BARS "R"
PLACE AS SHOWN

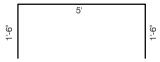

#6 BARS "S"
PLACE AS SHOWN

#4 BARS "W"
6 EACH TO BE PLACED AT 16" SPACING ALONG GUTTER SIDE AND INLET SIDE OF RING. (3 EACH SIDE)

#6 BARS "T"
PLACE AS SHOWN

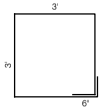

#4 BARS "V"

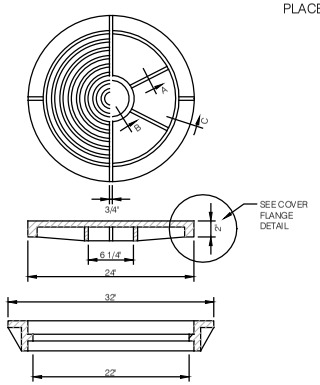

CAST IRON RING AND COVER

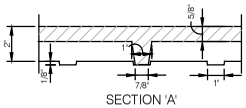

SECTION 'A'

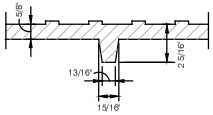

SECTION 'B'

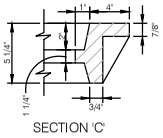

SECTION 'C'

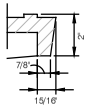

COVER FLANGE DETAIL

GENERAL NOTES:
1. ALL CONCRETE SHALL BE CLASS 'A'.
2. CHAMFER ALL EXPOSED CORNERS 3/4" EXCEPT WHERE OTHERWISE NOTED.
3. DIMENSIONS RELATED TO REINFORCING STEEL ARE TO THE CENTERS OF BARS.
4. FIELD CUT AND BEND BARS AS NECESSARY TO ACCOMMODATE STORM DRAIN PIPE.
5. CAST IRON RING AND COVER SHALL CONFORM TO ITEM 471.
6. DEPTHS OTHER THAN THOSE SHOWN MAY BE USED WHENEVER NECESSARY. QUANTITIES FOR OTHER DEPTHS WITHIN THE LIMITS OF THE TABLES MAY BE FOUND BY INTERPOLATION.
7. DURING STAGE 1 CONSTRUCTION, INLETS WILL NOT BE CONSTRUCTED ABOVE SUBGRADE ELEVATION UNLESS PERMISSION IS GRANTED BY THE ENGINEER.
8. A TEMPORARY WOOD COVER SHALL BE INSTALLED AFTER STAGE 1 IS COMPLETED, AND WILL REMAIN IN PLACE UNTIL STAGE 2 BEGINS.
9. THE LOCATION OF INLET AS SHOWN IN THE PLANS REFERS TO THE CONTROL POINT AT THE GUTTER LINE AND MID-POINT OF THE INLET.
10. IF CONCRETE PAVEMENT IS PLACED WITHOUT UNDERLAYMENT, PLACE BOND BREAKER (3 LAYERS OF 30# ROOFING FELT OR 1/2" EXPANSION JOINT MATERIAL) BETWEEN INLET DECK AND CONCRETE PAVEMENT. A SEALED 1/2" EXPANSION JOINT SHALL BE PLACED ALONG ALL VERTICAL FACES ABUTTING CONCRETE PAVEMENT. SEAL JOINT WITH CLASS 3,4,5 OR 7 JOINT SEALANT.

SUMMARY OF QUANTITIES				
	C.Y. CLASS 'A' CONCRETE		LBS. REINFORCING STEEL	
"L" (FT)	"D" = 6'	ADD P.L.F.	"D" = 6'	ADD P.L.F.
5'	5.43	0.54	988	96
10'	8.31	0.78	1727	154
15'	11.19	1.03	2467	211
20'	14.07	1.28	3206	268

CONCRETE QUANTITY REDUCTION TABLE	
PIPE DIAMETER	REDUCTION ONE PIPE C.U. YD.
15"	0.04
18"	0.05
21"	0.08
24"	0.09
27"	0.11
30"	0.14
33"	0.17
36"	0.20
39"	0.23
42"	0.26
45"	0.30
48"	0.35

SHEET. # S17

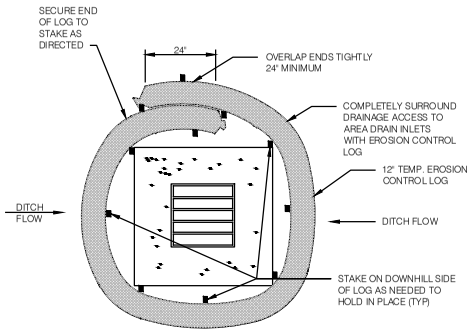

DROP INLET SEDIMENT TRAP

DI-ST

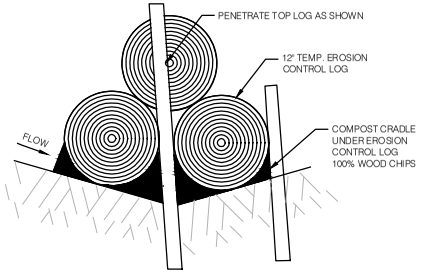

DITCH LINE SEDIMENT TRAP A-A

DL-ST

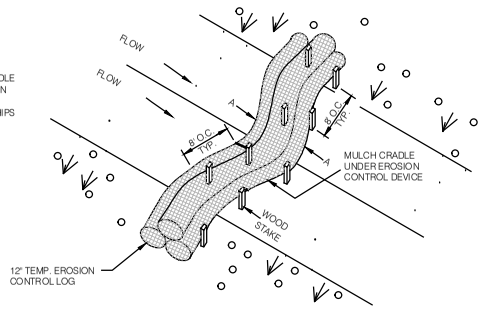

DITCH LINE SEDIMENT TRAP

DL-ST

PLANS SHEET LEGEND

DI-ST — DROP INLET SEDIMENT TRAP

DL-ST — DITCH LINE SEDIMENT TRAP

BOCI-ST — BACK OF CURB INLET SEDIMENT TRAP

ROW-ST — RIGHT OF WAY SEDIMENT TRAP

CI-ST — CURB INLET SEDIMENT TRAP

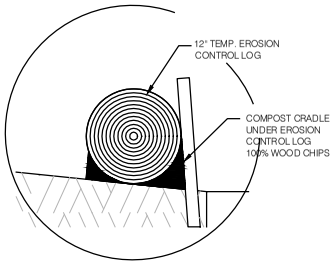

COMPOST CRADLE

SEDIMENT BASIN & TRAP USAGE GUIDELINES

A SEDIMENT TRAP MAY BE USED TO PRECIPITATE SEDIMENT OUT OF RUNOFF DRAINING FROM AN UNSTABILIZED AREA.

TRAPS: THE DRAINAGE AREA FOR A SEDIMENT TRAP SHOULD NOT EXCEED 5 ACRES. THE TRAP CAPACITY SHOULD BE 1800 CF/ACRE (0.5' OVER THE DRAINAGE AREA).

SEDIMENT TRAPS SHOULD BE PLACED IN THE FOLLOWING LOCATIONS:
1. IMMEDIATELY PRECEDING DRAIN INLETS
2. JUST BEFORE THE DRAINAGE ENTERS A WATER COURSE
3. JUST BEFORE THE DRAINAGE LEAVES THE RIGHT OF WAY
4. JUST BEFORE THE DRAINAGE LEAVES THE CONSTRUCTION LIMITS WHERE DRAINAGE FLOWS AWAY FROM THE PROJECT

THE TRAP SHOULD BE CLEANED WHEN THE CAPACITY HAS BEEN REDUCED BY 1/2 OR THE SEDIMENT HAS ACCUMULATED TO A DEPTH OF 1', WHICHEVER IS LESS. CLEANING AND REMOVAL OF ACCUMULATED SEDIMENT DEPOSITS IS INCIDENTAL AND WILL NOT BE PAID FOR SEPARATELY.

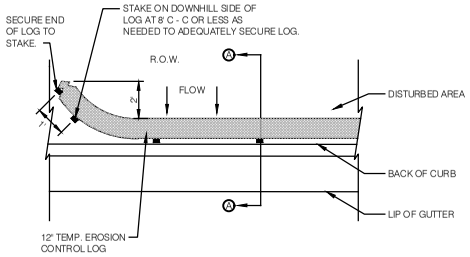

PLAN VIEW

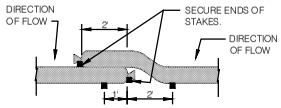

LAP DETAIL

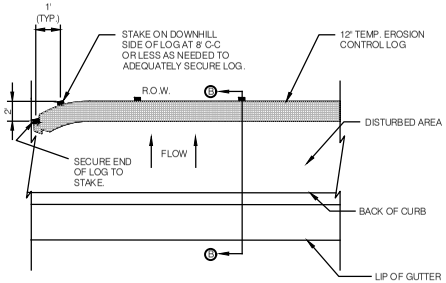

PLAN VIEW

GENERAL NOTES:
1. LENGTHS OF EROSION CONTROL LOGS SHALL BE IN ACCORDANCE WITH MANUFACTURER'S RECOMMENDATIONS AND AS REQUIRED FOR THE PURPOSE INTENDED. MAXIMUM LENGTH OF LOGS SHALL BE 30' FOR 12" DIAMETER LOGS.
2. UNLESS OTHERWISE DIRECTED, USE BIODEGRADABLE OR PHOTODEGRADABLE CONTAINMENT MESH ONLY WHERE LOG WILL REMAIN IN PLACE AS PART OF A VEGETATIVE SYSTEM. FOR TEMPORARY INSTALLATIONS, USE RECYCLABLE CONTAINMENT MESH.
3. STUFF LOGS WITH SUFFICIENT FILTER MATERIAL TO ACHIEVE DENSITY THAT WILL HOLD SHAPE WITHOUT EXCESSIVE DEFORMATION.
4. STAKES SHALL BE 2" X 2" WOOD 4' LONG, EMBEDDED SUCH THAT 2" PROTRUDES ABOVE LOG.
5. COMPOST CRADLE MATERIAL IS INCIDENTAL AND WILL NOT BE PAID FOR SEPARATELY.

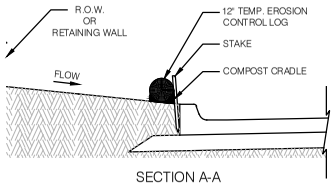

SECTION A-A

BACK OF CURB INLET SEDIMENT TRAP

BOCI-ST

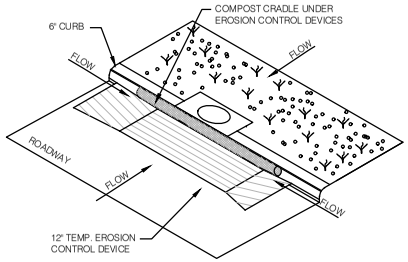

CURB INLET SEDIMENT TRAP

CI-ST

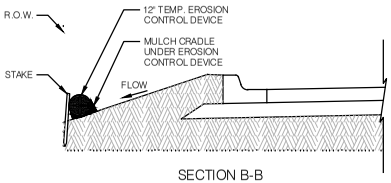

SECTION B-B

RIGHT-OF-WAY SEDIMENT TRAP

ROW-ST

SHEET. #

S18

WEATHERFORD 1858 TRUE TEXAS

CITY OF WEATHERFORD

DRAWN BY

DATE 01/2020

TRANSPORTATION AND PUBLIC WORKS DEPARTMENT

TEMPORARY EROSION CONTROL

SHEET. #

S18

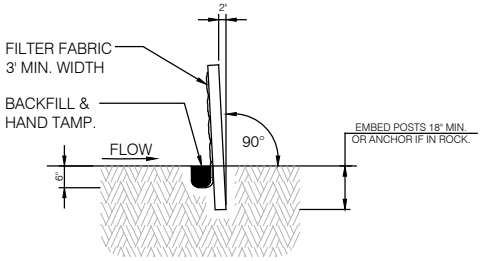

SECTION A-A

GENERAL NOTES:

1. THE GUIDELINES SHOWN HEREON ARE SUGGESTIONS ONLY AND MAY BE MODIFIED BY THE ENGINEER.

PLAN SHEET LEGEND

SEDIMENT CONTROL FENCE — SCF —

SEDIMENT CONTROL FENCE USAGE GUIDELINES

A SEDIMENT CONTROL FENCE MAY BE CONSTRUCTED NEAR THE DOWNSTREAM PERIMETER OF A DISTURBED AREA ALONG A CONTOUR TO INTERCEPT SEDIMENT FROM OVERLAND RUNOFF. A 2 YEAR STORM FREQUENCY MAY BE USED TO CALCULATE THE FLOW RATE TO BE FILTERED.

SEDIMENT CONTROL FENCE SHOULD BE SIZED TO FILTER A MAX. FLOW THROUGH RATE TO 100 GPM/FT^2. SEDIMENT CONTROL FENCE IS NOT RECOMMENDED TO CONTROL EROSION FROM A DRAINAGE AREA LARGER THAN 2 ACRES.

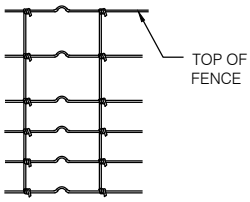

GALV. HINGE JOINT KNOT WOVEN MESH (12.5 GA. MIN.) REQUIRES A MINIMUM OF FIVE HORIZONTAL WIRES SPACED AT A MAX.12 INCHES APART AND ALL VERTICAL WIRES SPACED AT A MAX. 12 INCHES APART.

HINGE JOINT KNOT WOVEN MESH (OPTION)

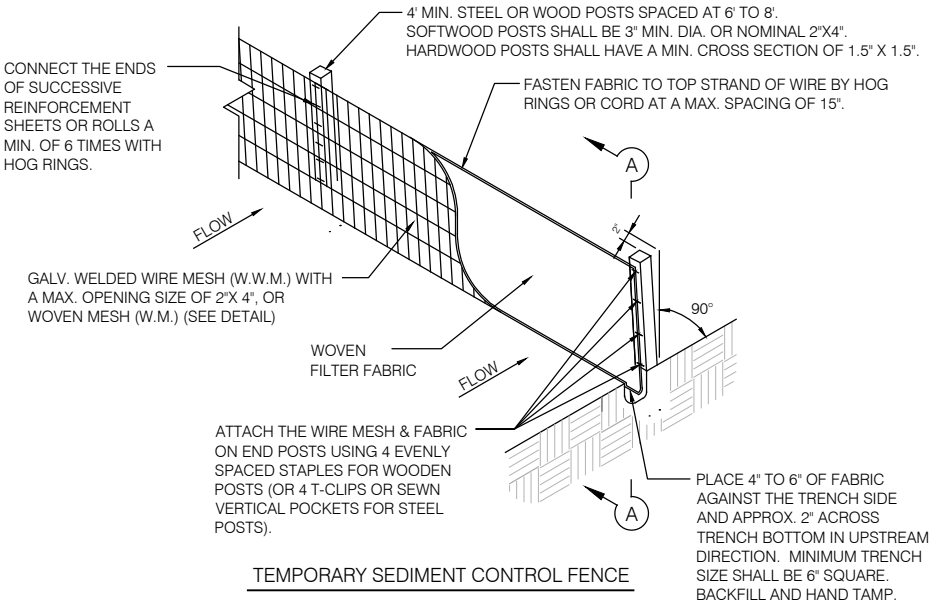

TEMPORARY SEDIMENT CONTROL FENCE

— SCF —

	DATE	TRANSPORTATION AND PUBLIC WORKS DEPARTMENT	SHEET. #
1858 WEATHERFORD TRUE TEXAS	01/2020		S19
	DRAWN BY	TEMPORARY EROSION, SEDIMENT AND WATER POLLUTION CONTROL MEASURES FENCE	
	CITY OF WEATHERFORD		

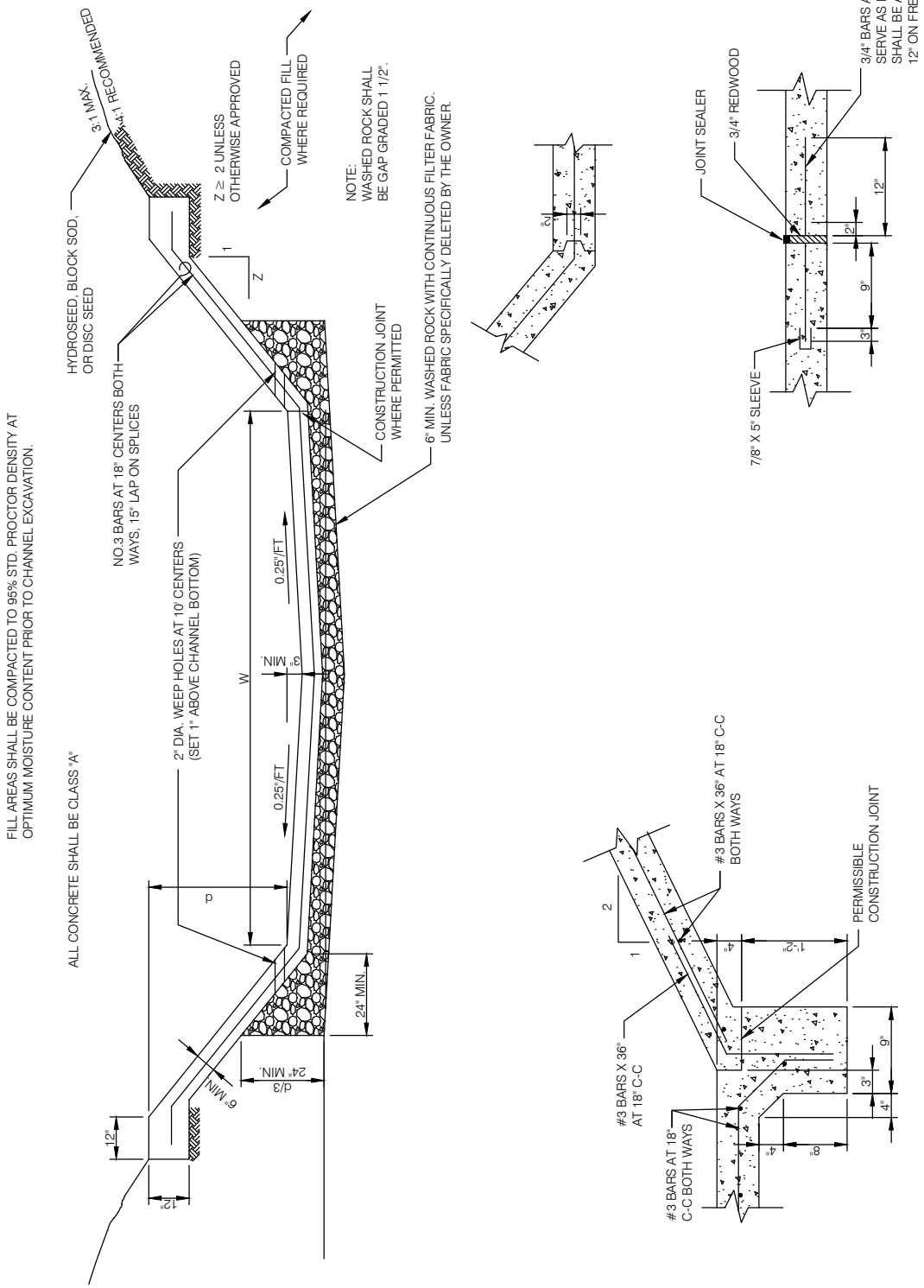

SHEET. #

S20

	DATE	TRANSPORTATION AND PUBLIC WORKS DEPARTMENT	SHEET. #
WEATHERFORD 1858 TRUE TEXAS	01/2020		S20
	DRAWN BY	FULL CHANNEL LINING CONCRETE REINFORCED	
	CITY OF WEATHERFORD		

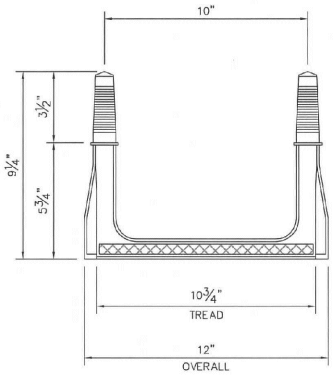

PLAN

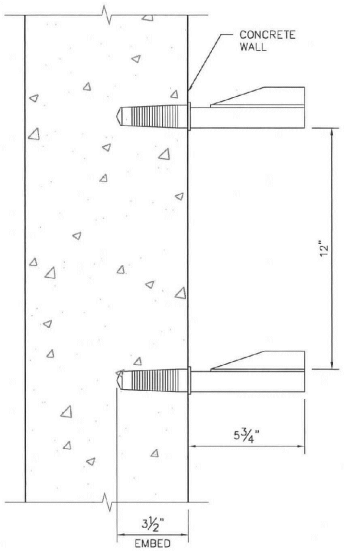

ELEVATION

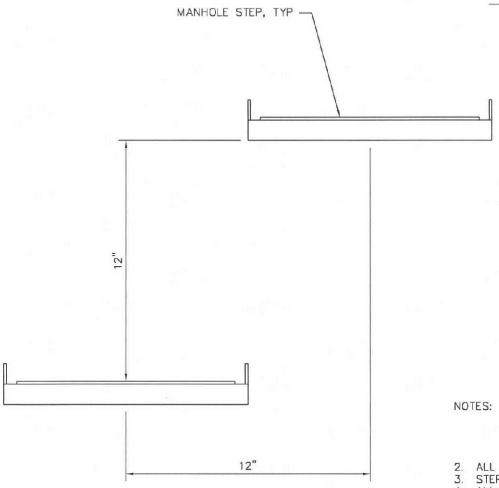

WALL ELEVATION

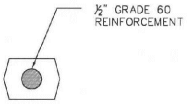

STEP SECTION

NOTES:

2. ALL STEPS SHALL BE TIGHT AND FIRMLY EMBEDDED.
3. STEPS SHALL BE PARALLEL.
4. ALL STEPS WITHIN A STRUCTURE SHALL BE OF THE SAME DESIGN, SIZE, AND TYPE.
5. DRILLED HOLES FOR STEPS SHALL BE CLEAN AND DRY. STEPS SHALL BE ATTACHED TO WALL WITH EPOXY.

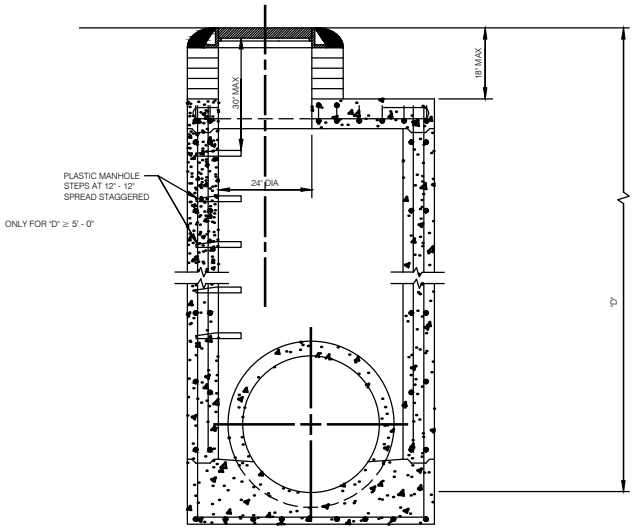

	DATE	TRANSPORTATION AND PUBLIC WORKS DEPARTMENT	SHEET. #
1858 WEATHERFORD TRUE TEXAS	01/2020		S21
	DRAWN BY	MANHOLE STEP DETAIL	
	CITY OF WEATHERFORD		

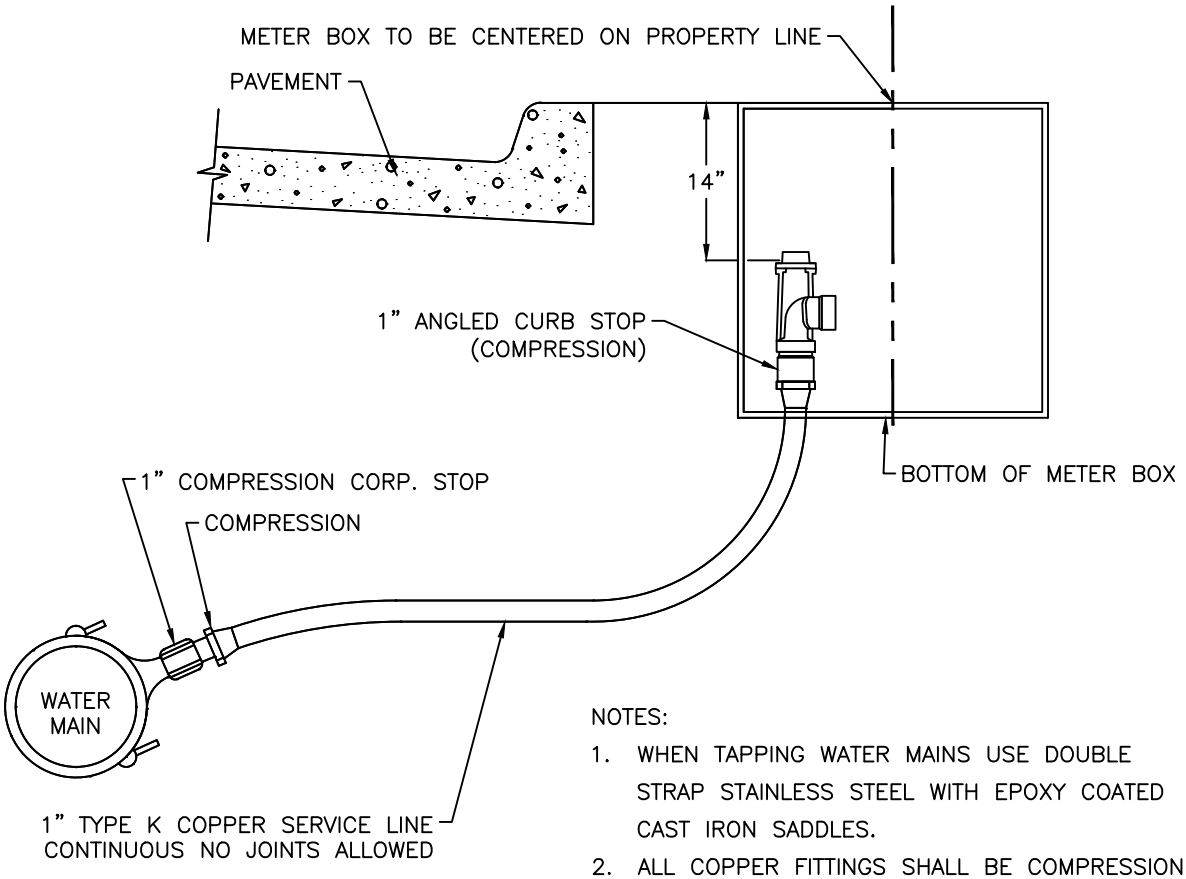

NOTES:

1. WHEN TAPPING WATER MAINS USE DOUBLE STRAP STAINLESS STEEL WITH EPOXY COATED CAST IRON SADDLES.
2. ALL COPPER FITTINGS SHALL BE COMPRESSION FITTINGS.
3. ALL SADDLES AND CORP. STOPS SHALL HAVE CC THREADS.
4. METER SHALL NOT BE INSTALLED IN SIDEWALKS.
5. METER BOX TO BE FURNISHED BY AND INSTALLED BY CONTRACTOR.
6. METER BOX SHALL BE 18" DIAMETER PVC WITH CAST IRON RING AND LID. WHITE RHINO OR APPROVED EQUAL.
7. CURB STOP SHALL BE MUELLER H-14258N OR EQUIVALENT (110 CTS X SWIVLE NUT).
8. ALL METER CAN LIDS SHALL HAVE AMR READER HOLE.
9. CORP. STOP SHALL BE MUELLER H-15008N OR EQUIVALENT.
10. METERS INSTALLED IN DRIVEWAYS MUST BE TRAFFIC RATED DFW PLASTICS DFW37C-14-1-MBF_DEEP OR EQUIVALENT.

NOT TO SCALE

	DATE	UTILITY DEPARTMENT	SHEET. #
1858 WEATHERFORD TRUE TEXAS	01/2020		U1
	DRAWN BY	1 INCH SERVICE DETAIL	
	CITY OF WEATHERFORD		

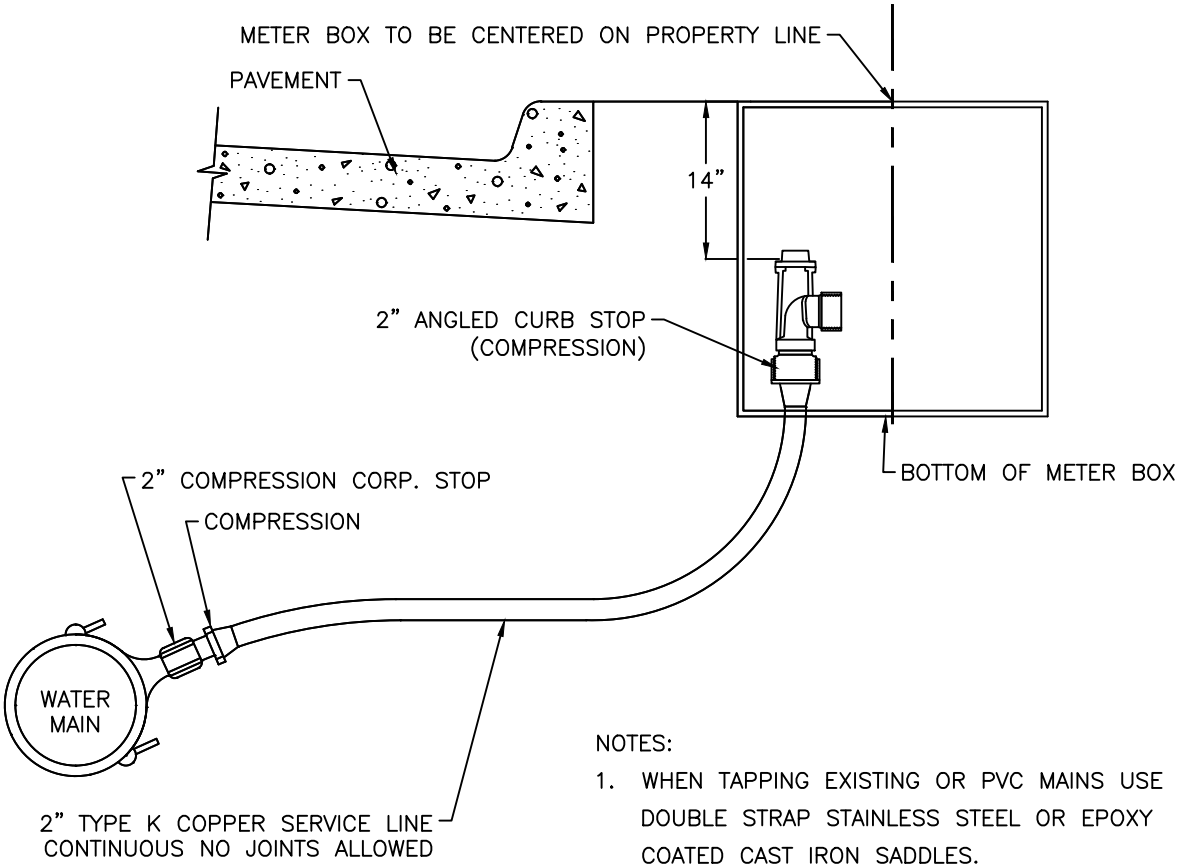

NOTES:

1. WHEN TAPPING EXISTING OR PVC MAINS USE DOUBLE STRAP STAINLESS STEEL OR EPOXY COATED CAST IRON SADDLES.
2. ALL COPPER FITTINGS SHALL BE COMPRESSION FITTINGS.
3. ALL SADDLES AND CORP. STOPS SHALL HAVE CC THREADS.
4. METER SHALL NOT BE INSTALLED IN SIDEWALKS OR DRIVEWAYS.
5. METER BOX TO BE FURNISHED BY AND INSTALLED BY CONTRACTOR.
6. METER BOX SHALL BE 24" DIAMETER PVC WITH CAST IRON RING AND LID. WHITE RHINO OR APPROVED EQUAL.
7. CURB STOP SHALL BE MUELLER H-14277N OR EQUIVALENT (110 CTS X FLANGE).
8. ALL METER CAN LIDS SHALL HAVE AMR READER HOLE.
9. CORP. STOP SHALL BE MUELLER H-15008N OR EQUIVALENT.
10. METERS INSTALLED IN DRIVEWAYS MUST BE TRAFFIC RATED DFW PLASTICS DFW37C-14-1-MBF_DEEP OR EQUIVALENT.

NOT TO SCALE

1858 WEATHERFORD TRUE TEXAS	DATE 01/2020	UTILITY DEPARTMENT	SHEET. #
	DRAWN BY CITY OF WEATHERFORD	2 INCH SERVICE DETAIL	U2

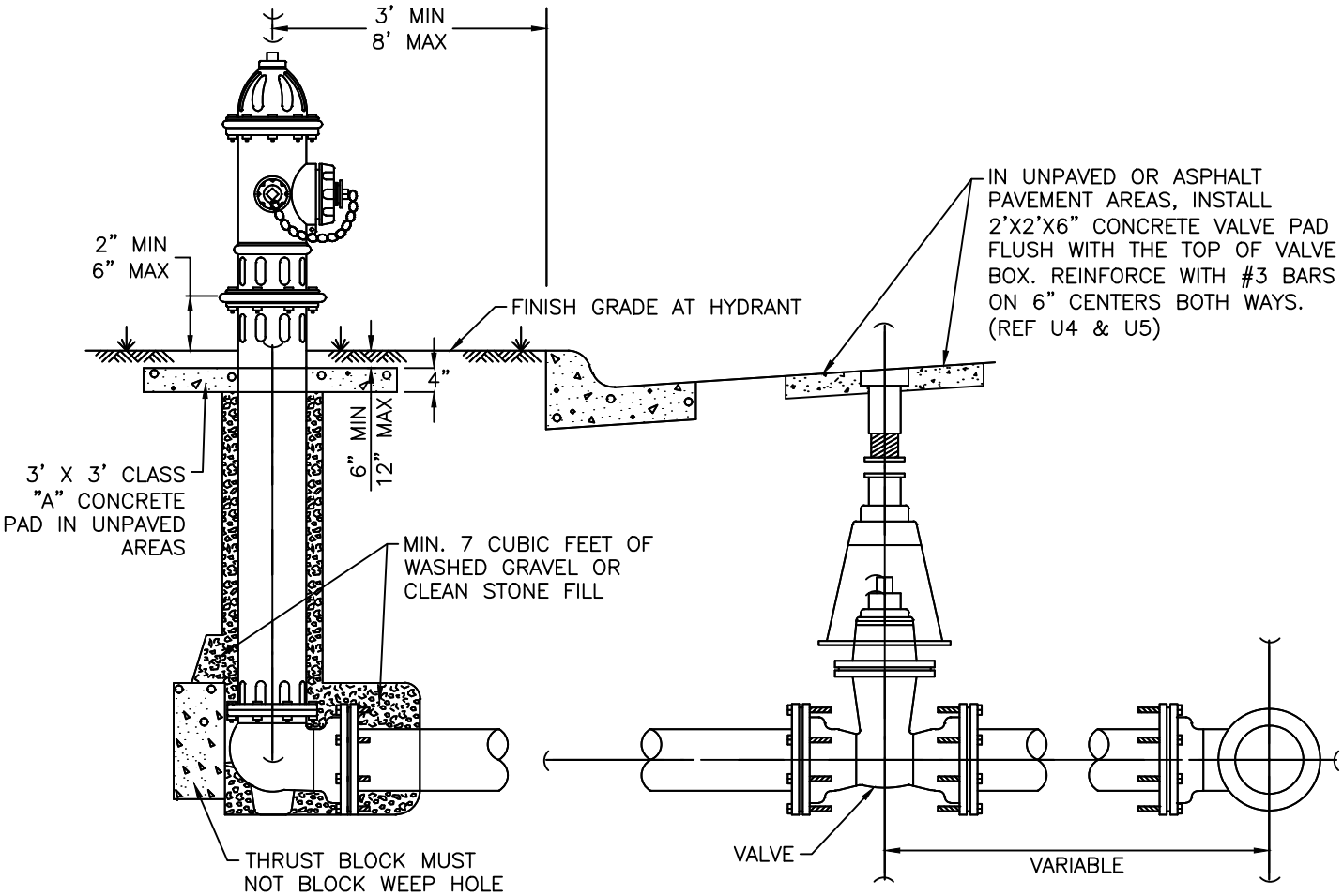

NOTES:

1. IN GENERAL, ALL FIRE HYDRANTS SHALL CONFORM TO AWWA STANDARD SPECIFICATIONS FOR FIRE HYDRANTS FOR ORDINARY WATER WORKS SERVICE, C–502. FIRE HYDRANTS SHALL HAVE A 5 1/4 " MIN. VALVE OPENING AND A BARREL APPROXIMATELY 7" INSIDE DIAMETER. ALL HYDRANTS SHALL BE EQUIPPED WITH A BREAKAWAY FLANGE.
2. ALL JOINTS SHALL BE RESTRAINED MECHANICAL JOINTS.
3. ACTUAL VALVE LOCATION WILL DEPEND ON LOCATION OF WATER MAIN.
4. F.H. NO CLOSER THAN 18" TO EXISTING OR PROPOSED SIDEWALKS.
5. STANDARD BURY DEPTH 5' FEET.
6. LOCATE HYDRANTS NEAR CORNERS OF LOTS.
7. F.H. SHALL BE LOCATED MINIMUM 1 FT. OUTSIDE OF THE AREA BETWEEN THE P.C.'S OF THE CORNER TURNING RADII AT INTERSECTIONS. (SEE PLAN VIEW).
8. FIRE HYDRANT SHALL BE MUELLER CENTURION, M&H MODEL 129, OR CLOW MEDALLION.
9. FIELD PAINT WITH SHERWIN WILLIAMS INTERNATIONAL RED – F75RC7.

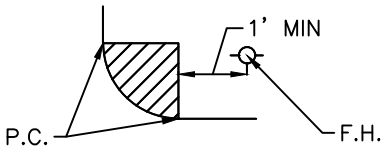

PLAN VIEW
N.T.S.

NOT TO SCALE

	DATE	UTILITY DEPARTMENT	SHEET. #
WEATHERFORD 1858 TRUE TEXAS	01/2020		U3
	DRAWN BY	FIRE HYDRANT INSTALLATION	
	CITY OF WEATHERFORD		

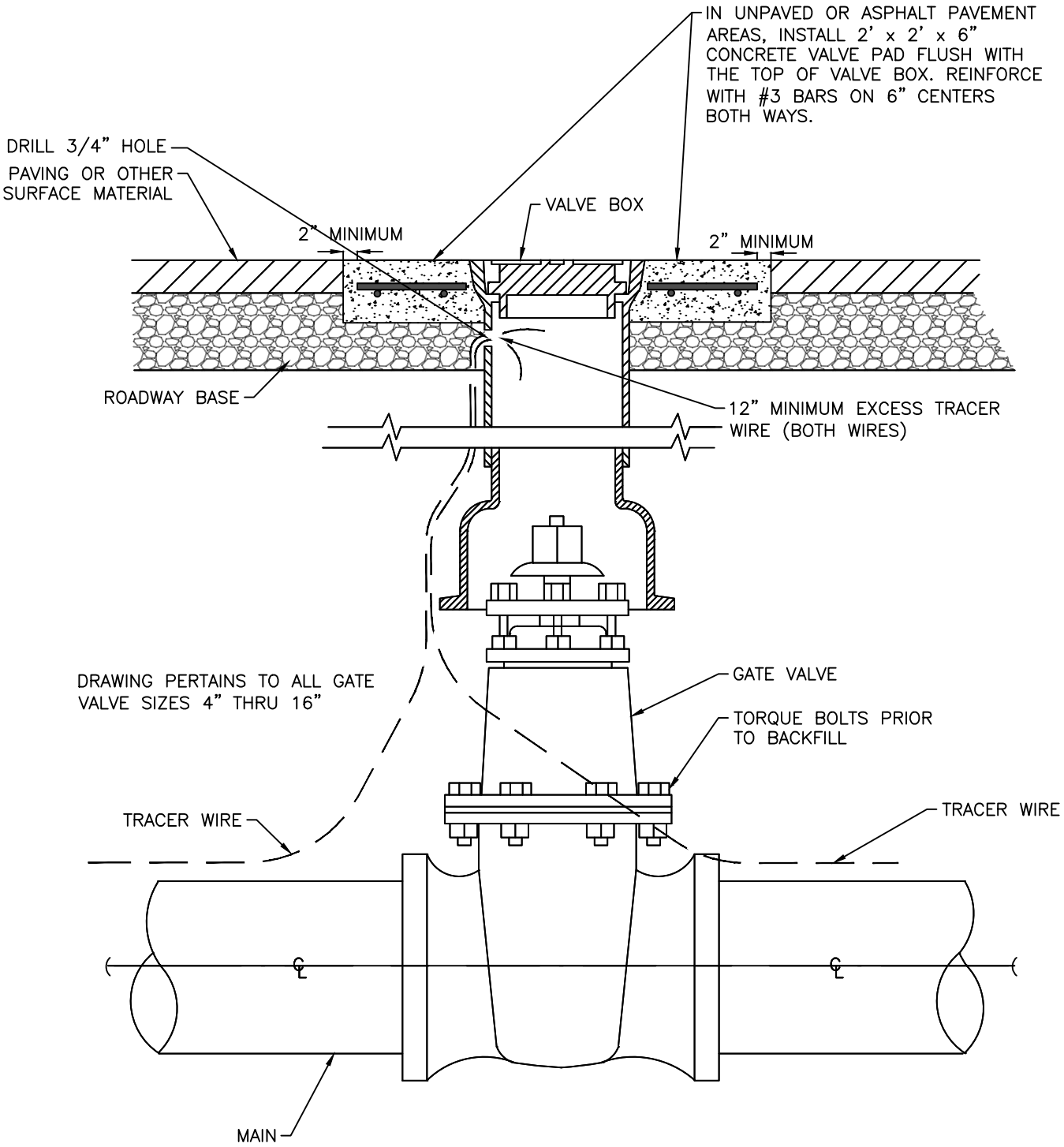

NOT TO SCALE

	DATE	UTILITY DEPARTMENT	SHEET. #
WEATHERFORD 1858 TRUE TEXAS	01/2020		U4
	DRAWN BY	GATE VALVE BOX 4 FOOT OR LESS	
	CITY OF WEATHERFORD		

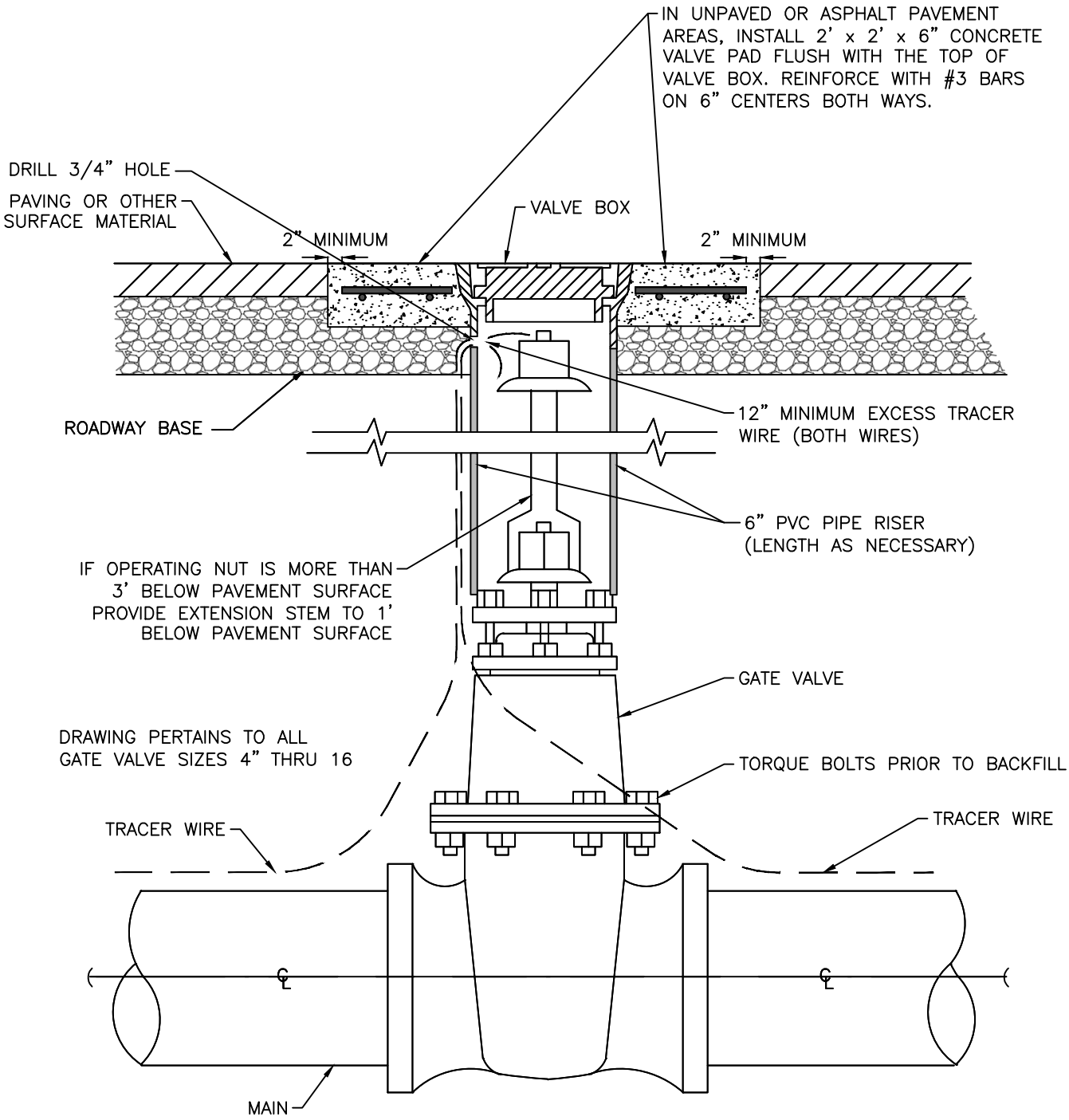

NOT TO SCALE

	DATE	UTILITY DEPARTMENT	SHEET. #
WEATHERFORD 1858 TRUE TEXAS	01/2020		U5
	DRAWN BY	GATE VALVE BOX & EXTENSION STEM DEEPER THAN 4 FOOT	
	CITY OF WEATHERFORD		

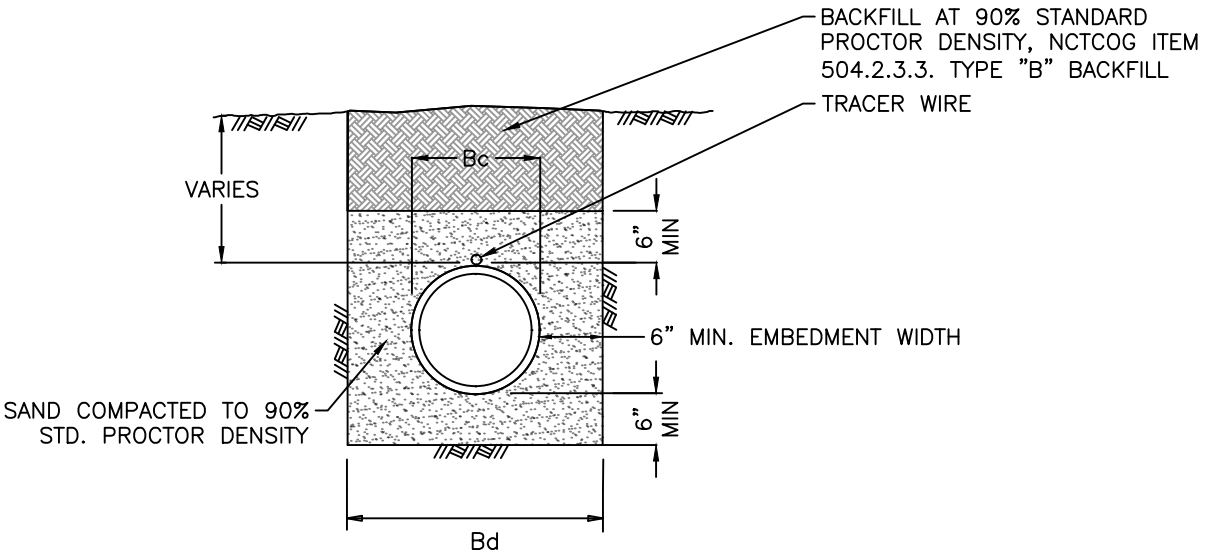

WATER

N.T.S.

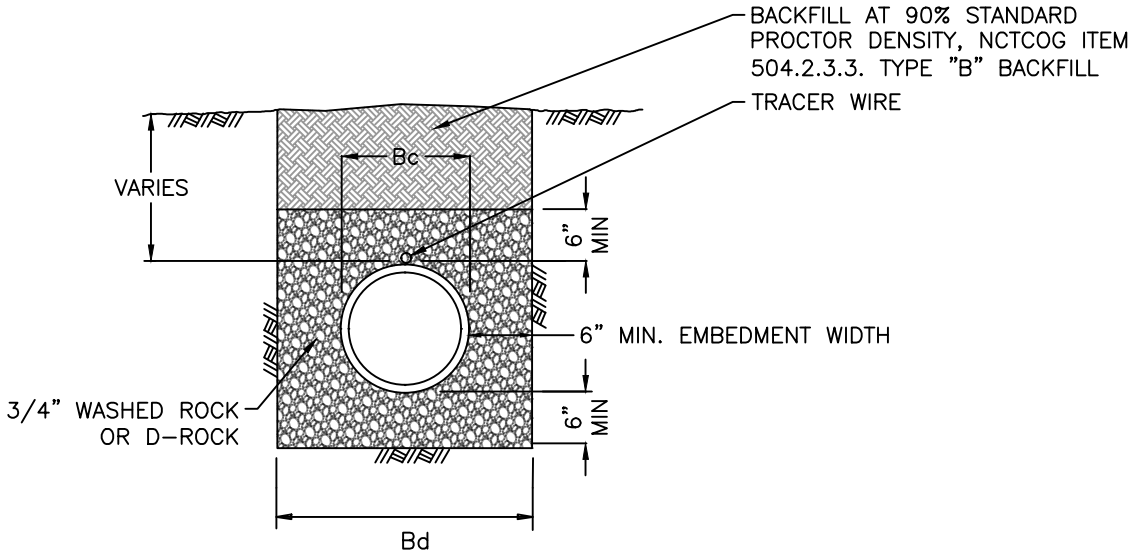

WASTEWATER

N.T.S.

NOTES:
1. Bc = OUTSIDE DIAMETER OF PIPE
2. Bd = TRENCH WIDTH

NOT TO SCALE

	DATE	UTILITY DEPARTMENT	SHEET. #
WEATHERFORD 1858 TRUE TEXAS	01/2020		U6
	DRAWN BY	TYPICAL UTILITY TRENCH SECTION NON-PAVED AREAS	
	CITY OF WEATHERFORD		

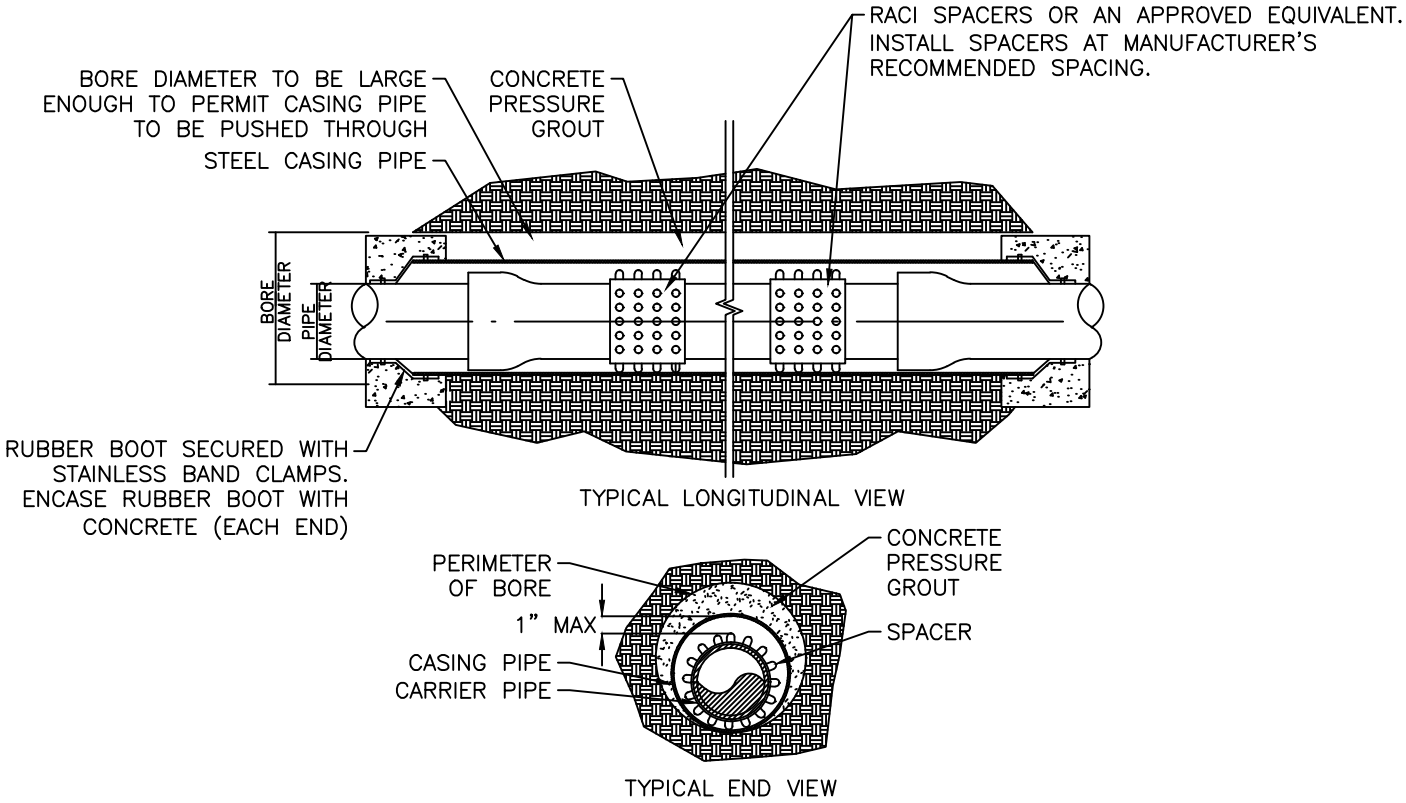

BORE AND CASING DETAIL FOR ROAD AND RAILROAD CROSSINGS
N.T.S.

NOTES:

1. CARRIER PIPE COMPRESSION TYPE JOINTS TO BE USED IF POSSIBLE.
2. IF COMPRESSION TYPE JOINT IS NOT AVAILABLE FOR CARRIER PIPE, RESTRAINED MJ TYPE SHALL BE USED AND JOINTS BOLTED BEFORE PULLING PIPE INTO PLACE.
3. MINIMUM WALL THICKNESS OF 36" AND LARGER CASING SHALL BE 0.50".
4. PIPE SHALL BE COATED AND LINED IN ACCORDANCE WITH AWWA C-210 OR APPROVED EQUAL.
5. ALL CASING JOINTS JOINTS SHALL BE WELDED IN ACCORDANCE WITH AWWA C-206. AFTER PIPE IS WELDED, COATING AND LINING SHALL BE REPAIRED.
6. CASING PRODUCT SHALL BE FROM A MANUFACTURER THAT HAS NOT LESS THAN FIVE(5) YEARS SUCCESSFUL EXPERIENCE MANUFACTURING PIPE IN THE UNITED STATES OF PARTICULAR TYPE AND SIZE. ALL PIPE MANUFACTURING INCLUDING CYLINDER PRODUCTION, LINING, COATING AND FITTINGS SHALL BE PRODUCED BY ONE MANUFACTURER. THE PIPE MANUFACTURER MUST HAVE A CERTIFIED QUALITY ASSURANCE PROGRAM. THE CERTIFIED PROGRAM SHALL BE ISO 9001: 2000 OR OTHER EQUIVALENT NATIONALLY RECOGNIZED PROGRAM.

For lines crossing State highways or roads, crossing intersecting streets/county roads, or passing through the protected root area of desirable trees, it shall be clearly shown in description and on ALL plans that the line will be installed by conventional dry auger boring unless otherwise approved by a TxDOT engineer or Inspector. In addition, casing shall be shown under highways and paved city street/county road intersections.

STEEL CASING WALL THICKNESS	
DIA OF CASING PIPE	MIN THICKNESS
12" OR LESS	0.25"
12"-18"	0.3125"
18"-22"	0.3750"
22"-28"	0.4375

CASING PIPES SHALL BE SMOOTH STEEL PIPES WITH A MIN YIELD STRENGTH OF 35,000 PSI.

NOT TO SCALE

	DATE	UTILITY DEPARTMENT	SHEET. #
WEATHERFORD 1858 TRUE TEXAS	01/2020		U8
	DRAWN BY	BORE & CASING DETAIL	
	CITY OF WEATHERFORD		

GENERAL NOTES FOR ALL THRUST BLOCKS:

1. CONCRETE FOR BLOCKING SHALL BE CLASS "B".
2. ALL CALCULATIONS ARE BASED ON INTERNAL PRESSURE OF 200 PSI FOR DUCTILE IRON, P.V.C., AND 150 PSI FOR CONCRETE PIPE. IF PRESSURES EXCEEDED, RECALCULATE FOR THRUST BLOCKING DIMENSIONS.
3. VOLUMES OF THRUST BLOCKS ARE NET VOLUMES OF CONCRETE TO BE FURNISHED. THE CORRESPONDING WEIGHT OF THE CONCRETE (CLASS "B") IS EQUAL TO OR GREATER THAN THE VERTICAL COMPONENT OF THE THRUST ON THE VERTICAL BEND.
4. WALL THICKNESS (T) ASSUMED HERE FOR ESTIMATING PURPOSES ONLY.
5. POUR CONCRETE FOR BLOCK AGAINST UNDISTURBED EARTH.
6. DIMENSIONS MAY BE VARIED AS REQUIRED BY FIELD CONDITIONS WHERE AND AS DIRECTED BY THE ENGINEER. THE VOLUME OF CONCRETE BLOCKING SHALL NOT BE LESS THAN SHOWN HERE.
7. THE SOIL BEARING PRESSURES ARE BASED ON 1000 LBS./S.F. IN SOIL AND 2000 LBS./S.F. IN ROCK.
8. USE POLYETHYLENE WRAP OR EQUAL BETWEEN CONCRETE AND BEND, TEE, OR PLUG TO PREVENT THE CONCRETE FROM STICKING TO IT.
9. CONCRETE SHALL NOT EXTEND BEYOND JOINTS.
10. ALL FITTINGS THAT REQUIRE THRUST BLOCKING SHALL ALSO INCLUDE MECHANICAL JOINT RESTRAINTS, EBBA IRON SERIES 2000 PV.

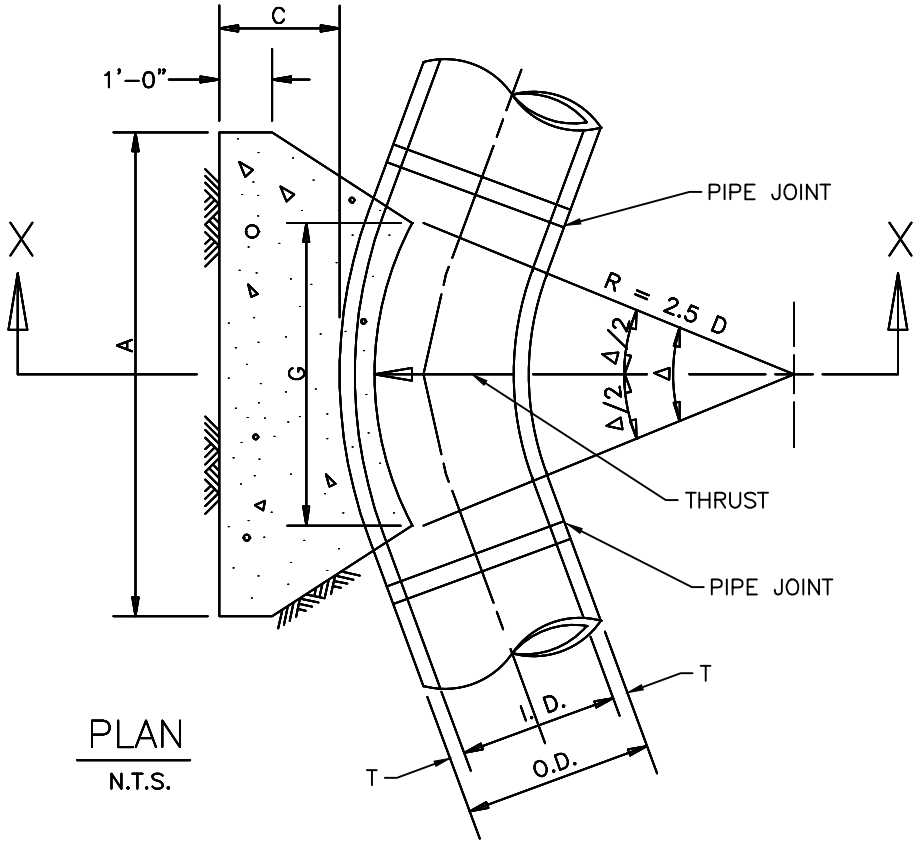

PLAN

N.T.S.

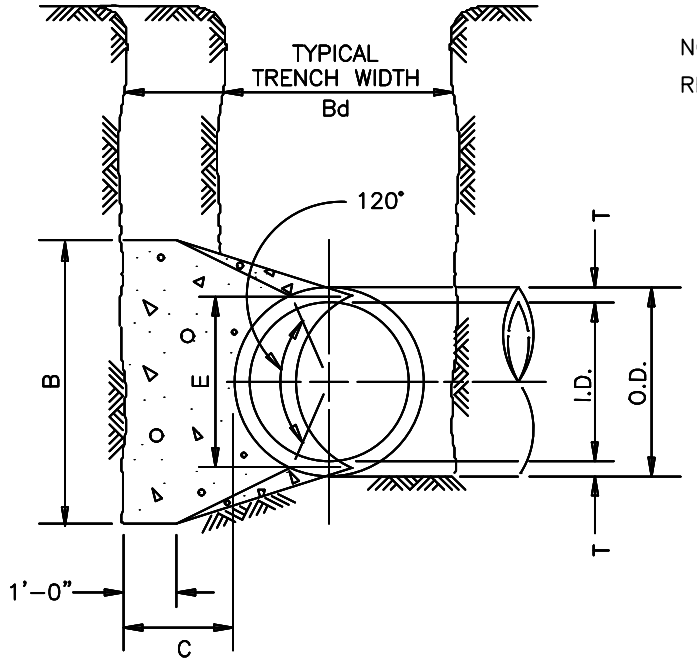

NOTE:

REFER TO U9 FOR GENERAL NOTES

SECTION X–X

N.T.S.

NOT TO SCALE

	DATE	UTILITY DEPARTMENT	SHEET. #
WEATHERFORD 1858 TRUE TEXAS	01/2020		U10
	DRAWN BY	HORIZONTAL THRUST BLOCK AT PIPE BEND	
	CITY OF WEATHERFORD		

I.D. (IN.)	Δ = 30°								I.D. (IN.)	Δ = 45°							
			EARTH			ROCK						EARTH			ROCK		
	G (FT.)	THRUST (TONS)	A (FT.)	B (FT.)	VOL. (C.Y.)	A (FT.)	B (FT.)	VOL. (C.Y.)		G (FT.)	THRUST (TONS)	A (FT.)	B (FT.)	VOL. (C.Y.)	A (FT.)	B (FT.)	VOL. (C.Y.)
4,6,8	1.0	2.6	2.0	1.5	0.2	1.0	1.5	0.1	4,6,8	1.5	3.9	2.0	2.0	0.2	1.5	1.5	0.1
10,12	1.5	5.9	2.5	2.5	0.3	2.0	1.5	0.2	10,12	2.2	8.7	3.5	2.5	0.5	2.0	2.5	0.3
16,18	2.2	13.2	3.5	4.0	0.8	2.5	3.0	0.4	16,18	3.2	19.5	4.5	4.5	1.2	3.0	3.5	0.6
20	2.4	16.3	4.5	4.0	1.0	3.0	3.0	0.5	20	3.6	24.1	5.5	4.5	1.5	3.5	3.5	0.7
24	2.9	23.4	6.0	4.0	1.4	3.5	3.5	0.7	24	4.3	34.6	8.0	4.5	2.3	4.5	4.0	1.1
30	3.6	27.5	6.5	5.0	1.9	3.5	4.0	0.9	30	5.4	40.6	8.5	5.0	3.2	5.5	4.0	1.6
36	4.4	39.5	7.0	6.0	3.4	4.5	4.5	1.6	36	6.5	58.5	10.0	6.0	5.3	6.5	4.5	2.6
42	5.1	53.8	8.0	7.0	5.1	5.5	5.0	2.5	42	7.5	79.6	11.5	7.0	8.1	8.0	5.0	4.2
48	5.8	70.3	9.0	8.0	7.4	6.0	6.0	3.7	48	8.6	104.0	13.0	8.0	11.9	9.0	6.0	6.3
54	6.5	89.0	10.0	9.0	10.3	7.0	6.5	5.3	54	9.7	131.5	15.0	9.0	17.1	10.5	6.5	8.9
60	7.3	110.0	11.0	10.0	13.9	7.5	7.5	7.3	60	10.7	162.4	16.5	10.0	23.1	11.0	7.5	12.0
66	8.0	132.9	12.5	11.0	18.9	8.5	8.0	9.6	66	11.8	196.5	18.0	11.0	30.1	12.0	8.5	16.2
72	8.7	158.2	13.5	12.0	24.0	9.0	9.0	12.3	72	12.9	233.9	19.5	12.0	38.6	14.0	8.5	20.7
78	9.4	185.6	14.5	13.0	30.0	10.0	9.5	15.6	78	13.9	274.5	21.5	13.0	49.8	14.5	9.5	25.9
84	10.1	215.3	15.5	14.0	37.1	10.5	10.5	19.5	84	15.0	318.4	23.0	14.0	61.2	15.5	10.5	32.6
90	10.9	247.1	16.5	15.0	45.0	11.5	11.0	23.9	90	16.1	365.5	24.5	15.0	74.5	17.5	10.5	39.6
96	11.6	281.2	18.0	16.0	55.5	12.5	11.5	28.9	96	17.1	415.6	26.0	16.0	89.5	18.5	11.5	48.5

I.D. (IN.)	Δ = 67.50°								I.D. (IN.)	Δ = 90°							
			EARTH			ROCK						EARTH			ROCK		
	G (FT.)	THRUST (TONS)	A (FT.)	B (FT.)	VOL. (C.Y.)	A (FT.)	B (FT.)	VOL. (C.Y.)		G (FT.)	THRUST (TONS)	A (FT.)	B (FT.)	VOL. (C.Y.)	A (FT.)	B (FT.)	VOL. (C.Y.)
4,6,8	2.1	5.6	3.0	2.0	0.3	2.0	1.5	0.2	4,6,8	2.7	7.1	5.0	1.5	0.4	2.0	2.0	0.2
10,12	3.1	12.6	5.5	2.5	0.8	3.5	2.0	0.4	10,12	4.0	16.0	6.5	2.5	1.0	3.5	2.5	0.5
16,18	4.7	28.3	7.5	4.0	1.9	5.5	3.0	0.9	16,18	6.0	36.0	9.0	4.0	2.4	4.5	4.0	1.0
20	5.2	34.9	9.0	4.0	2.3	5.5	3.5	1.2	20	6.6	44.4	10.0	4.5	3.1	6.0	4.0	1.5
24	6.2	50.3	11.5	4.5	3.5	6.5	4.0	1.6	24	7.9	64.0	14.5	4.5	5.0	8.0	4.0	2.1
30	7.8	58.9	12.0	5.0	4.8	7.5	4.0	2.2	30	9.9	75.0	15.0	5.0	6.7	10.0	4.0	3.3
36	9.4	84.9	14.5	6.0	8.2	9.5	4.5	3.8	36	11.9	108.0	18.0	6.0	11.4	12.0	4.5	5.3
42	10.9	115.5	17.0	7.0	12.8	11.0	5.5	6.3	42	13.9	147.0	21.0	7.0	17.8	14.0	5.5	8.7
48	12.5	150.9	19.0	8.0	18.4	13.0	6.0	9.2	48	15.9	192.0	24.0	8.0	26.2	16.0	6.0	12.4
54	14.0	191.0	21.5	9.0	26.0	15.0	6.5	12.9	54	17.9	243.0	27.0	9.0	36.9	18.0	7.0	18.1
60	15.6	235.8	24.0	10.0	35.6	16.0	7.5	17.6	60	19.9	299.8	30.0	10.0	50.3	20.0	7.5	24.0
66	17.1	285.3	26.0	11.0	46.0	18.0	8.0	23.0	66	21.8	362.8	33.0	11.0	66.2	22.0	8.5	32.5
72	18.7	339.5	28.5	12.0	57.8	19.0	9.0	28.4	72	23.8	431.8	36.0	12.0	85.6	24.0	9.0	41.0
78	20.2	398.5	31.0	13.0	75.7	21.0	9.5	37.4	78	25.7	506.7	39.0	13.0	108.2	26.0	10.0	53.2
84	21.8	462.1	33.5	14.0	94.7	22.0	10.5	46.5	84	27.7	587.7	42.0	14.0	134.4	28.0	10.5	64.8
90	23.3	530.5	35.5	15.0	114.4	24.5	11.0	58.2	90	29.0	674.6	45.0	15.0	164.9	30.0	11.5	81.2
96	24.9	603.6	38.0	16.0	138.9	25.5	12.0	70.0	96	31.6	767.5	48.0	16.0	199.0	32.0	12.0	95.1

TABLES OF DIMENSIONS AND QUANTITIES

WEATHERFORD 1858 TRUE TEXAS	DATE 01/2020	UTILITY DEPARTMENT	SHEET. #
	DRAWN BY CITY OF WEATHERFORD	HORIZONTAL THRUST BLOCK AT PIPE BEND - TABLES 1	U11

I.D. (IN.)	T (IN.)	Δ = 11.25° (FT.)	Δ ≥ 22.50° (FT.)	E (FT.)
4,6,8	0.4	1.5	1.5	0.9
10,12	0.5	1.5	1.5	1.2
16,18	0.6	1.5	1.5	1.6
20	0.7	1.5	1.5	1.8
24	0.9	1.5	1.5	2.1
30	2.9	1.5	1.9	2.6
36	4.5	1.5	2.3	3.3
42	5.0	1.8	2.6	3.8
48	5.5	2.0	3.0	4.3
54	6.0	2.3	3.4	4.8
60	6.5	2.5	3.8	5.3
66	6.8	2.8	4.1	5.7
72	7.5	3.0	4.5	6.3
78	7.5	3.3	4.9	6.7
84	8.0	3.5	5.3	7.2
90	8.5	3.8	5.6	7.7
96	9.0	4.0	6.0	8.2

	Δ = 11.25°									Δ = 22.5°							
			EARTH			ROCK						EARTH			ROCK		
I.D. (IN.)	G (FT.)	THRUST (TONS)	A (FT.)	B (FT.)	VOL. (C.Y.)	A (FT.)	B (FT.)	VOL. (C.Y.)	I.D. (IN.)	G (FT.)	THRUST (TONS)	A (FT.)	B (FT.)	VOL. (C.Y.)	A (FT.)	B (FT.)	VOL. (C.Y.)
4,6,8	0.4	1.0	1.0	1.5	0.1	1.0	1.0	0.1	4,6,8	0.8	2.0	1.5	1.5	0.1	1.0	1.0	0.1
10,12	0.6	2.2	1.5	1.5	0.1	1.0	1.5	0.1	10,12	1.1	4.4	2.0	2.5	0.3	1.5	1.5	0.1
16,18	0.8	5.0	2.0	2.5	0.3	1.5	2.0	0.2	16,18	1.6	9.9	3.0	3.5	0.6	2.0	2.5	0.3
20	0.9	6.2	2.0	3.5	0.4	1.5	3.0	0.3	20	1.8	12.3	3.5	3.5	0.7	2.0	3.0	0.4
24	1.1	8.9	3.0	3.5	0.5	1.5	3.0	0.3	24	2.2	17.7	4.0	4.5	1.0	3.0	3.5	0.5
30	1.4	10.4	3.0	3.5	0.6	2.0	3.5	0.4	30	2.7	20.7	5.0	4.5	1.5	3.0	4.0	0.8
36	1.7	15.0	3.5	4.5	0.9	2.0	4.0	0.5	36	3.3	29.8	5.5	5.5	2.3	4.0	4.0	1.3
42	1.9	20.4	4.5	5.0	1.5	2.5	5.0	0.8	42	3.8	40.5	7.0	6.0	3.9	4.5	5.0	2.1
48	2.2	26.6	4.5	6.0	2.0	2.5	6.0	1.1	48	4.4	52.9	8.0	7.0	5.7	4.5	6.0	2.8
54	2.5	33.7	6.0	6.0	3.0	3.0	6.0	1.4	54	4.9	67.0	9.0	8.0	8.0	6.0	6.0	4.1
60	2.7	41.6	6.0	7.0	3.8	3.0	7.0	1.8	60	5.5	82.7	9.5	9.0	10.6	6.0	7.0	5.3
66	3.0	50.3	6.5	8.0	5.1	3.5	8.0	2.7	66	6.0	100.1	10.5	10.0	14.1	6.5	8.0	7.2
72	3.3	59.9	7.5	8.0	6.3	4.0	8.0	3.3	72	6.6	119.1	11.0	11.0	17.6	7.5	8.0	9.1
78	3.6	70.2	8.0	9.0	8.1	4.0	9.0	3.9	78	7.1	139.8	12.0	12.0	22.5	8.0	9.0	11.7
84	3.8	81.5	8.5	10.0	10.3	4.5	10.0	5.3	84	7.6	162.1	13.0	12.5	27.2	8.5	10.0	14.8
90	4.1	93.5	9.5	10.0	12.2	5.0	10.0	6.3	90	8.2	186.1	14.0	13.5	33.7	9.5	10.0	17.7
96	4.4	106.4	10.0	11.0	15.0	5.0	11.0	7.4	96	8.7	211.7	15.0	14.5	41.2	10.0	11.0	21.8

TABLES OF DIMENSIONS AND QUANTITIES

	DATE	UTILITY DEPARTMENT	SHEET. #
WEATHERFORD 1858 TRUE TEXAS	01/2020		U12
	DRAWN BY	HORIZONTAL THRUST BLOCK AT PIPE BEND - TABLES 2	
	CITY OF WEATHERFORD		

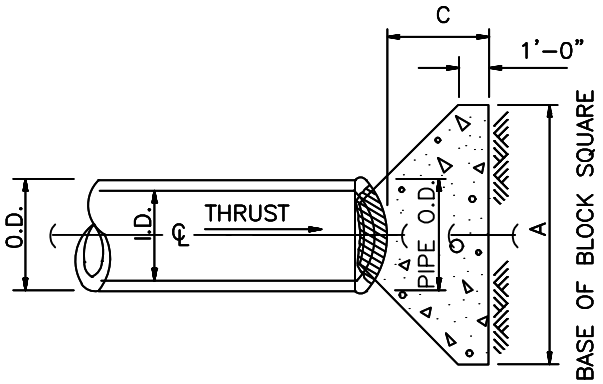

PLAN OF PLUG THRUST BLOCK

N.T.S.

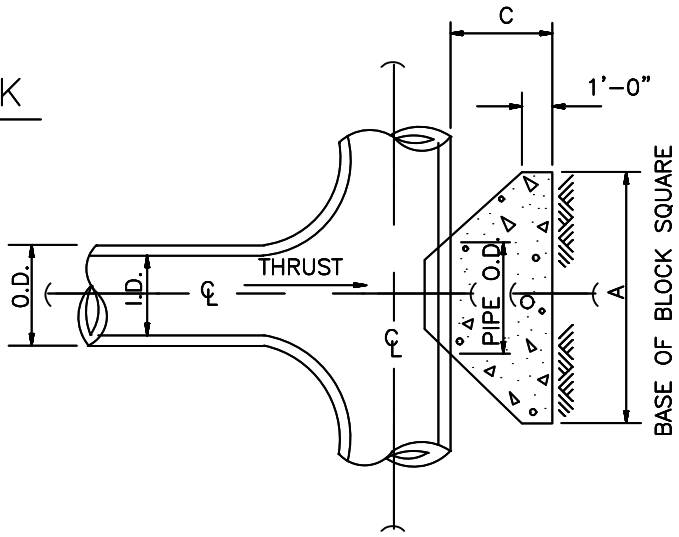

REFER TO U9
FOR GENERAL NOTES.

PLAN OF TEE THRUST BLOCK

N.T.S.

			EARTH		ROCK	
I.D. (IN.)	THRUST (TONS)	C (FT.)	A (FT.)	VOL. (C.Y.)	A (FT.)	VOL. (C.Y.)
4,6,8	5.1	1.5	2.5	0.3	2.0	0.2
10,12	11.3	1.5	3.5	0.6	2.5	0.3
16,18	25.5	2.0	5.5	1.6	4.0	0.9
20	31.5	2.0	6.0	1.9	4.0	0.9
24	45.2	2.5	7.0	3.1	5.0	1.7
30	53.0	3.0	7.5	4.1	5.5	2.4
36	76.3	4.0	9.0	7.3	6.5	4.2
42	104.0	4.5	10.5	11.0	7.5	6.2
48	136.0	5.0	12.0	15.6	8.5	8.7
54	172.0	5.5	13.5	21.4	9.5	11.9
60	212.0	6.0	15.0	28.4	10.5	15.7
66	257.0	6.5	16.5	36.8	11.5	20.5
72	305.0	7.5	17.5	47.2	12.5	27.2
78	358.0	8.0	19.0	58.9	13.5	33.7
84	416.0	8.5	20.5	72.3	14.5	41.2
90	477.0	9.0	22.0	87.7	15.5	49.7
96	543.0	9.5	23.5	104.8	16.5	61.0

NOT TO SCALE

WEATHERFORD 1858 TRUE TEXAS	DATE 01/2020	UTILITY DEPARTMENT	SHEET. #
	DRAWN BY CITY OF WEATHERFORD	HORIZONTAL THRUST BLOCK AT TEES & PLUGS	U13

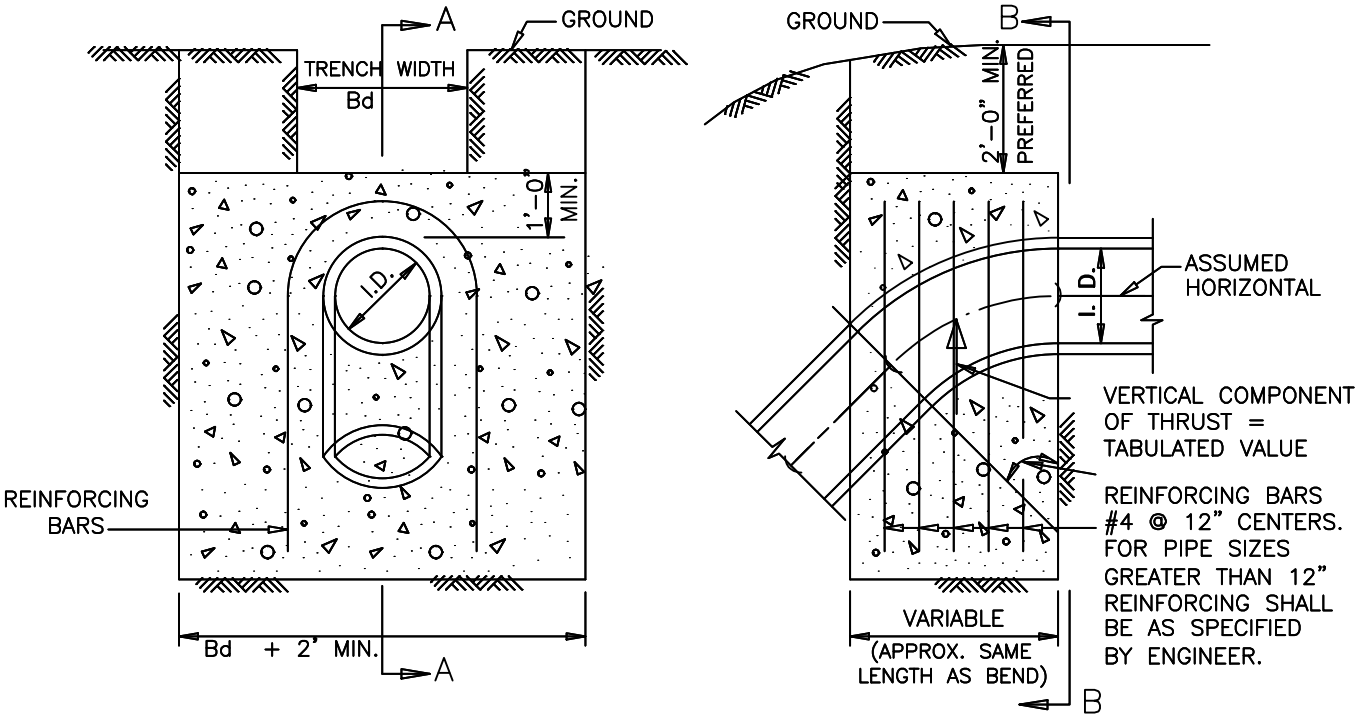

ELEVATION "B–B"

N.T.S.

SECTION "A–A"

N.T.S.

REFER TO U9
FOR GENERAL NOTES.

Δ →	11.25°		22.5°		30°		45°		67.5°		90°		← Δ
I.D. (IN.)	THRUST (TONS)	VOL. (C.Y.)	THRUST (TONS)	VOL. (C.Y.)	THRUST (TONS)	VOL. (C.Y.)	THRUST (TONS)	VOL. (C.Y.)	THRUST (TONS)	VOL. (C.Y.)	THRUST (TONS)	VOL. (C.Y.)	I.D. (IN.)
4,6,8	1.0	0.5	2.0	1.0	2.5	1.3	3.6	1.8	4.6	2.3	5.0	2.5	4,6,8
10,12	2.2	1.1	4.3	2.2	5.7	2.8	8.0	4.0	10.5	5.2	11.3	5.7	10,12
16,18	5.0	2.5	9.7	4.9	12.7	6.4	18.0	9.0	23.5	11.8	25.5	12.7	16,18
20	6.1	3.1	12.0	6.0	15.7	7.9	22.2	11.1	29.2	14.5	31.4	15.7	20
24	8.2	4.4	17.3	8.7	22.6	11.3	32.0	16.0	41.8	20.9	45.2	22.6	24
30	10.5	5.2	20.3	10.1	26.5	13.3	37.5	18.8	49.0	24.5	53.1	26.5	30
36	14.9	7.5	29.2	14.6	38.2	19.1	54.0	27.0	70.5	35.3	76.4	38.2	36
42	20.3	10.1	39.8	19.9	52.0	26.0	73.5	36.7	96.0	48.0	104.0	52.0	42
48	26.5	13.2	51.9	26.0	67.9	33.9	96.0	48.0	126.0	62.7	136.0	67.9	48
54	33.5	16.8	65.7	32.9	85.9	42.9	122.0	60.7	159.0	79.4	172.0	85.9	54
60	41.4	20.7	81.2	40.6	106.0	53.0	150.0	75.0	196.0	98.0	212.0	106.0	60
66	50.1	25.0	98.2	49.1	128.0	64.2	182.0	90.7	237.0	119.0	257.0	128.0	66
72	59.6	29.8	117.0	58.4	153.0	76.3	216.0	108.0	282.0	141.0	305.0	153.0	72
78	69.9	35.0	137.0	68.6	179.0	90.0	254.0	127.0	331.0	166.0	358.0	179.0	78
84	81.1	40.5	159.0	79.5	208.0	104.0	294.0	147.0	384.0	192.0	416.0	208.0	84
90	93.1	46.5	183.0	91.3	239.0	119.0	337.0	169.0	441.0	221.0	477.0	239.0	90
96	106.0	53.0	208.0	104.0	272.0	136.0	384.0	192.0	502.0	251.0	543.0	272.0	96

NOT TO SCALE

WEATHERFORD 1858 TRUE TEXAS	DATE 01/2020	UTILITY DEPARTMENT	SHEET. #
	DRAWN BY CITY OF WEATHERFORD	VERTICAL THRUST BLOCK AT PIPE BEND	U14

NOTES:

1. FIRST MAIN LINE JOINT TO BE A MIN. OF 5' LONG WITH 1' CONC. CRADLE (FROM SAME POUR AS BASE).
2. SEAL ALL JOINTS AND PENETRATIONS WITH NON-SHRINK GROUT.

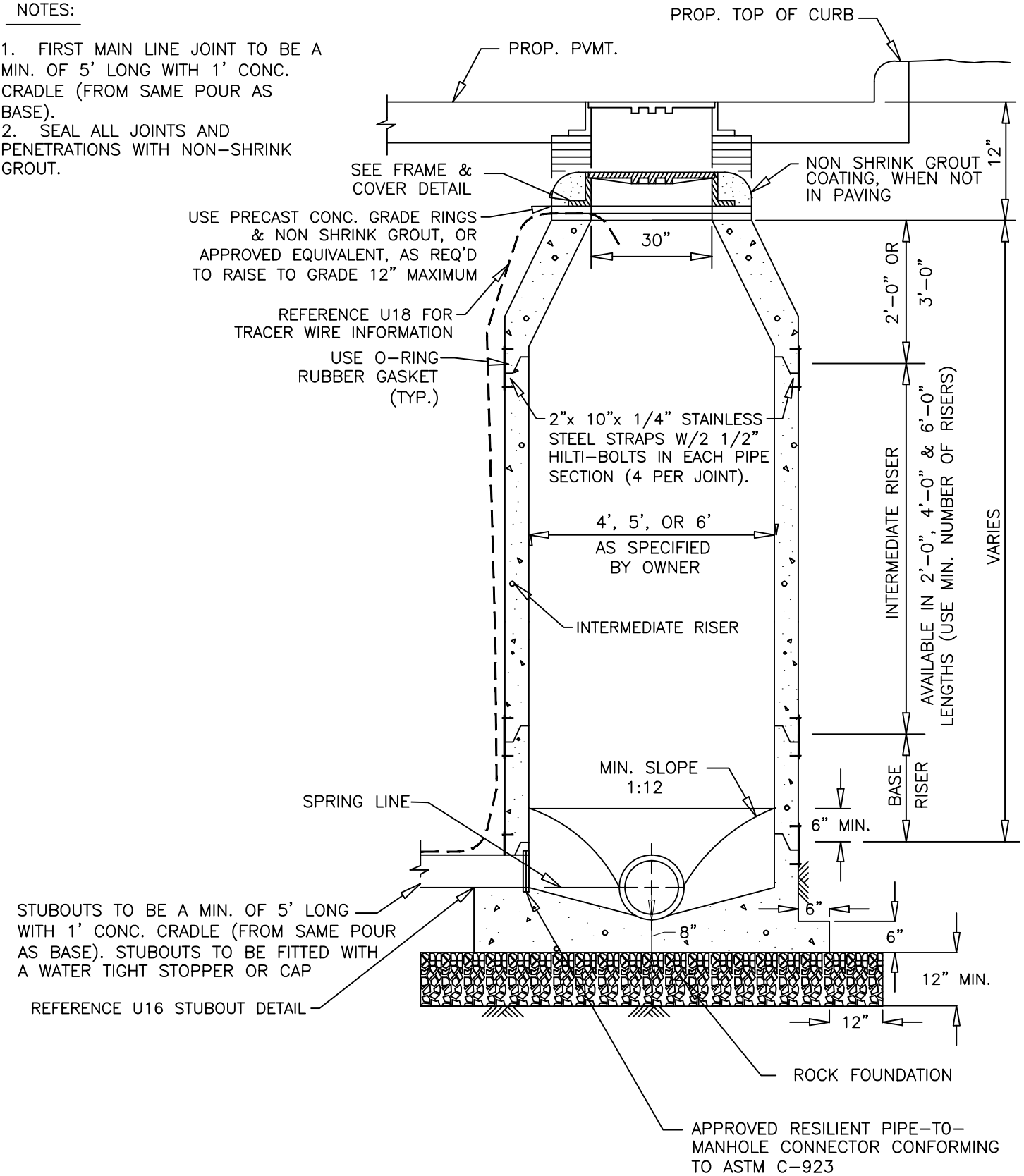

NOT TO SCALE

	DATE	UTILITY DEPARTMENT	SHEET. #
WEATHERFORD 1858 TRUE TEXAS	01/2020		U15
	DRAWN BY	WASTEWATER MANHOLE PRECAST	
	CITY OF WEATHERFORD		

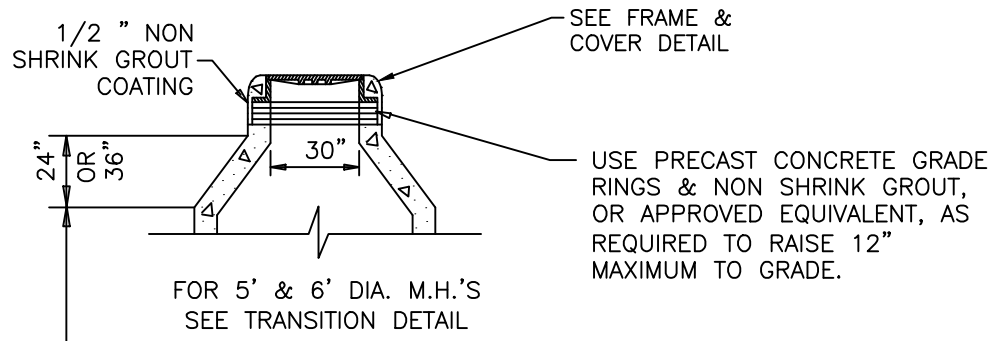

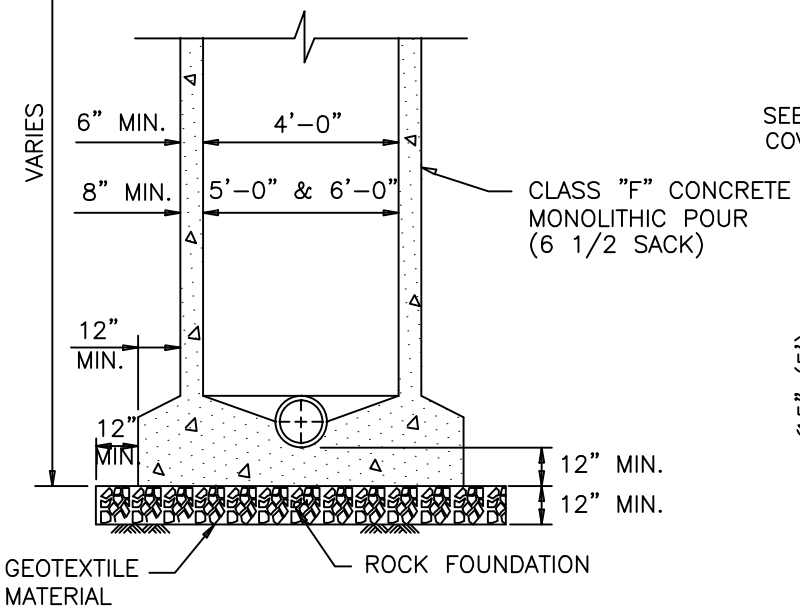

NOTES

1. WHERE M.H.'S ARE IN "PROPOSED" PAVING, FRAME & COVER SHALL BE SET 6" BELOW THE PROPOSED PAVEMENT GRADE.

NOTE:

TRACER WIRE

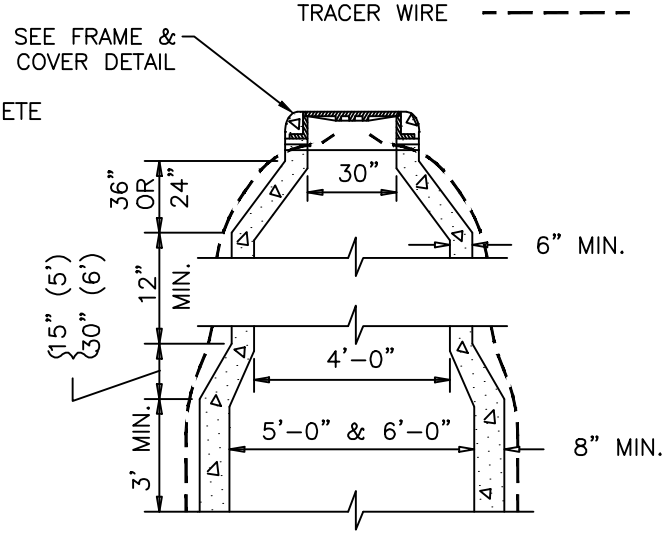

TRANSITION DETAIL FOR 5' & 6' DIA. M.H.'S

N.T.S.

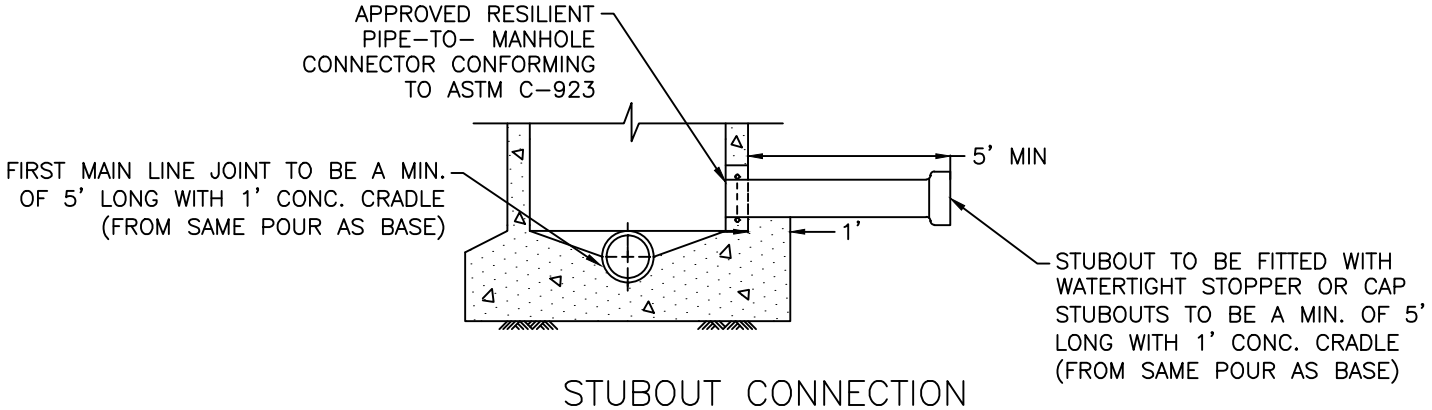

STUBOUT CONNECTION

N.T.S.

NOT TO SCALE

	DATE	UTILITY DEPARTMENT	SHEET. #
WEATHERFORD 1858 TRUE TEXAS	01/2020		U16
	DRAWN BY	WASTEWATER MANHOLE CAST IN PLACE	
	CITY OF WEATHERFORD		

NOTE:
MANHOLE PAD SHALL BE SLOPED TO PROVIDE ADEQUATE DRAINAGE AWAY FROM MANHOLE COVER.

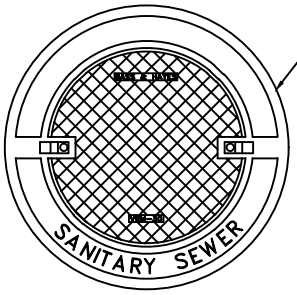

MANHOLE COVER

N.T.S.

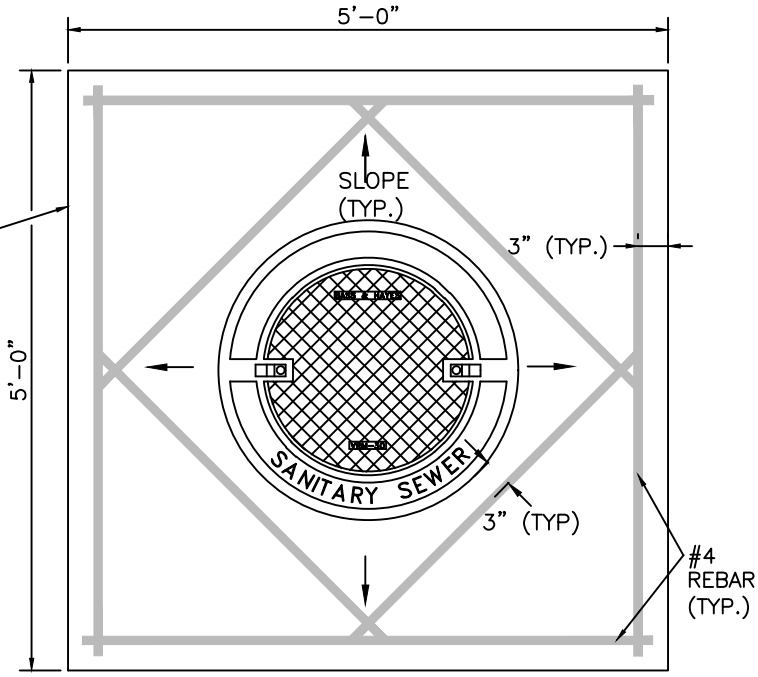

MANHOLE PAD FOR ALL MANHOLES IN UNPAVED OR ASPHALT PAVEMENT AREAS

N.T.S.

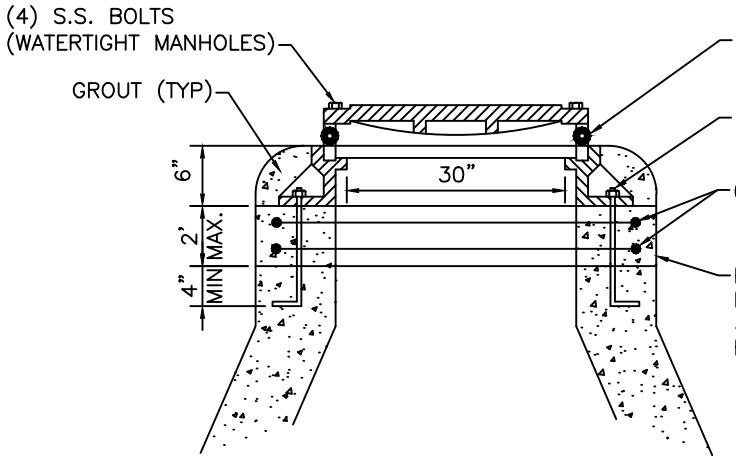

NOTES:

1. IF PRECAST ANCHOR BOLTS ARE UNAVAILABLE, 316 S.S. HILTI EPOXY TYPE ANCHOR BOLTS OF SIMILAR SIZE AND STRENGTH WILL BE ALLOWED.
2. FOR UNEVEN SLOPES LESS THAN 4:1% LADTECH ADJUSTING RING WEDGE OR APPROVED EQUAL MAY BE USED.

MANHOLE FRAME & COVER

N.T.S.

NOT TO SCALE

	DATE	UTILITY DEPARTMENT	SHEET. #
WEATHERFORD 1858 TRUE TEXAS	01/2020		U17
	DRAWN BY	WASTEWATER MANHOLE FRAME, COVER & PAD	
	CITY OF WEATHERFORD		

STANDARD
DROP CONNECTION
N.T.S.

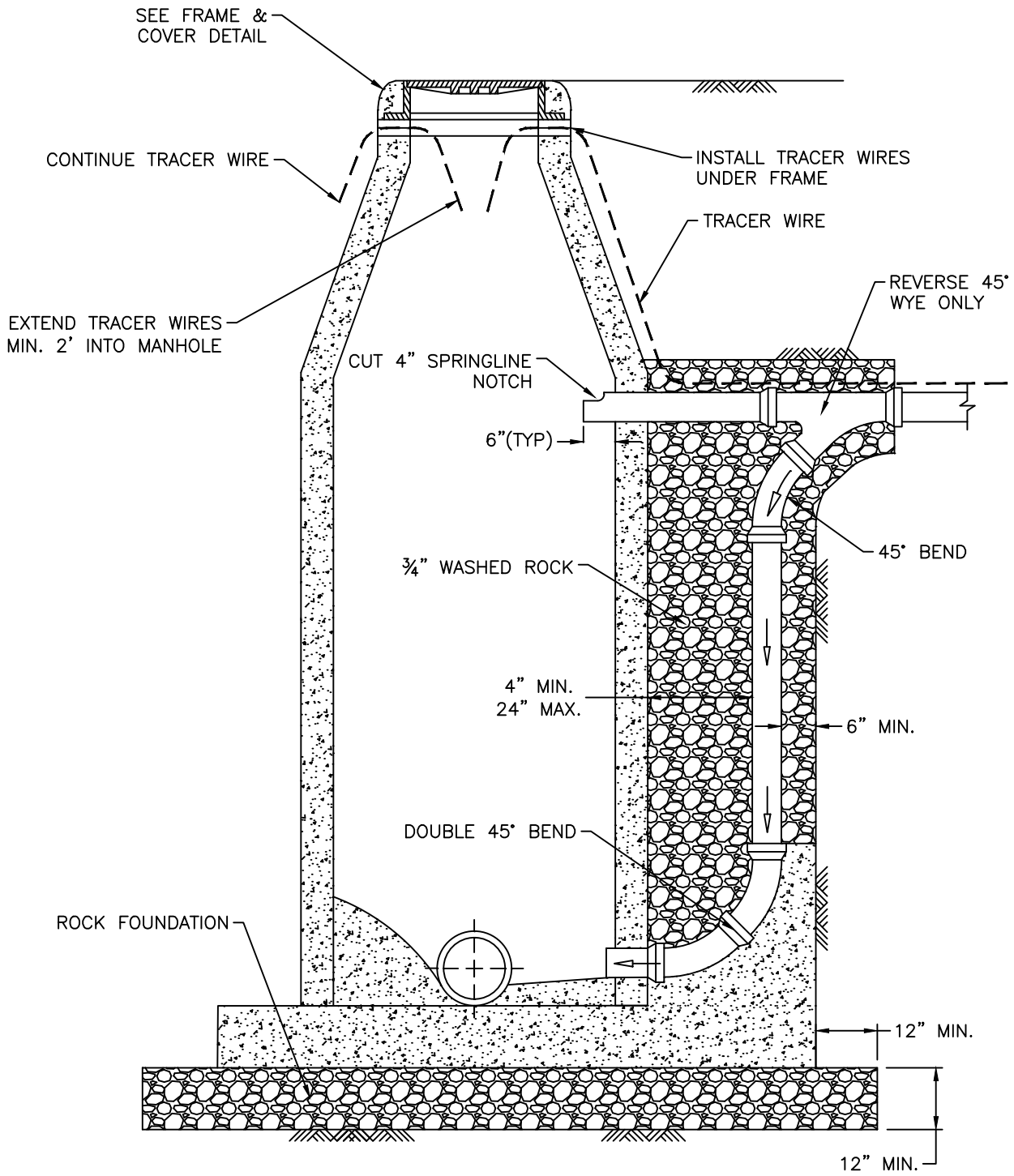

NOT TO SCALE

	DATE	UTILITY DEPARTMENT	SHEET. #
WEATHERFORD 1858 TRUE TEXAS	01/2020		U18
	DRAWN BY	WASTEWATER MANHOLE OUTSIDE DROP CONNECTIONS	
	CITY OF WEATHERFORD		

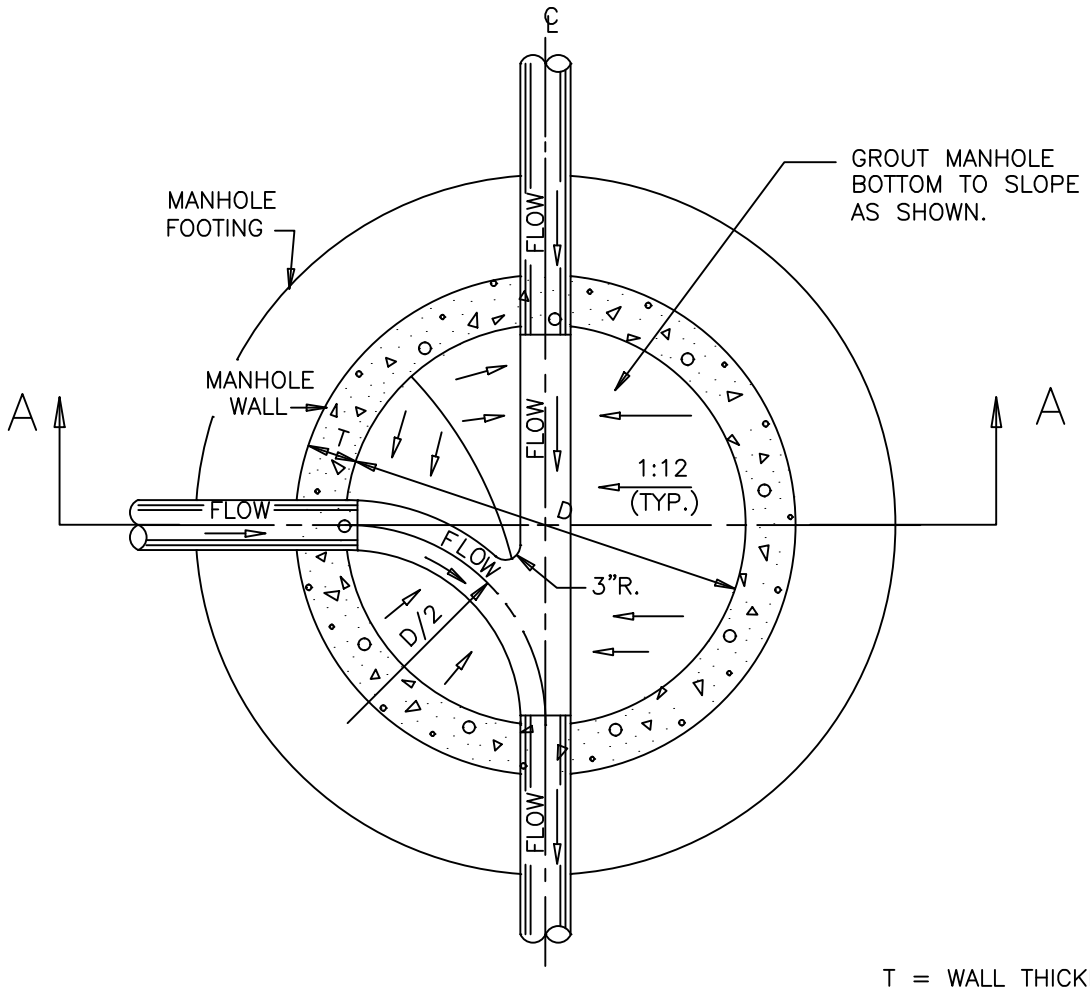

T = WALL THICKNESS
D = MANHOLE DIAMETER
d = PIPE DIAMETER

PLAN

N.T.S.

NOTE:
REFER TO MANHOLE STANDARD DRAWINGS FOR ADDITIONAL DETAIL OF M.H.

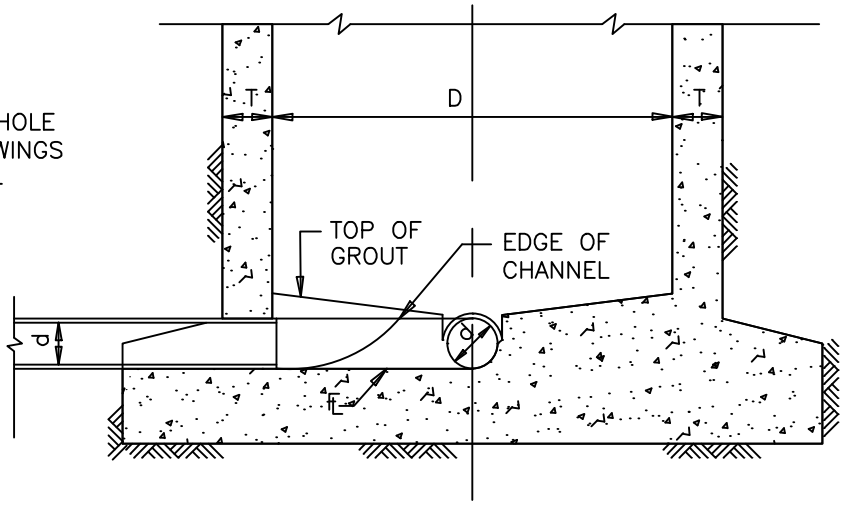

SECTION A–A

N.T.S.

NOT TO SCALE

	DATE	UTILITY DEPARTMENT	SHEET. #
WEATHERFORD 1858 TRUE TEXAS	01/2020		U19
	DRAWN BY	WASTEWATER MANHOLE LINE INTERSECTION	
	CITY OF WEATHERFORD		

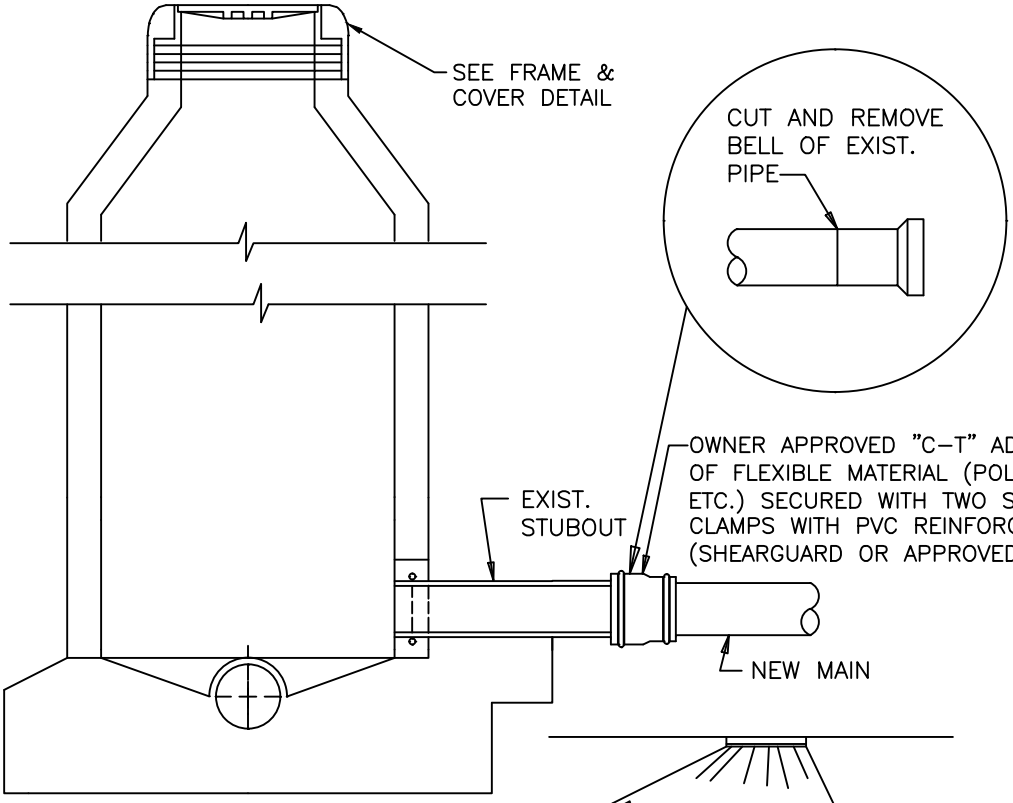

AT STUBOUT

N.T.S.

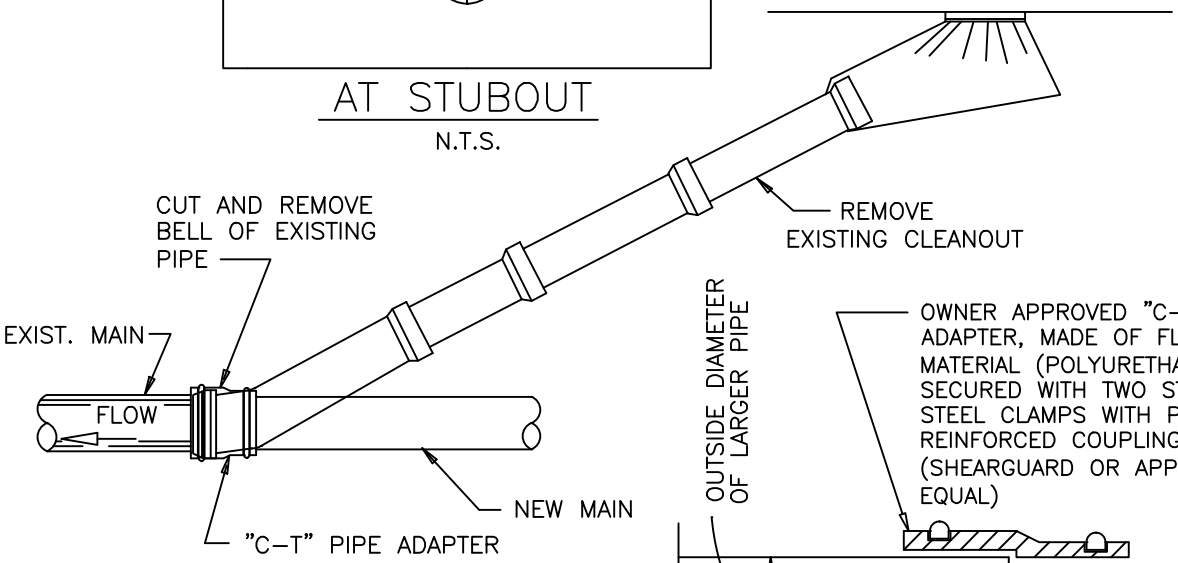

AT CLEANOUT

N.T.S.

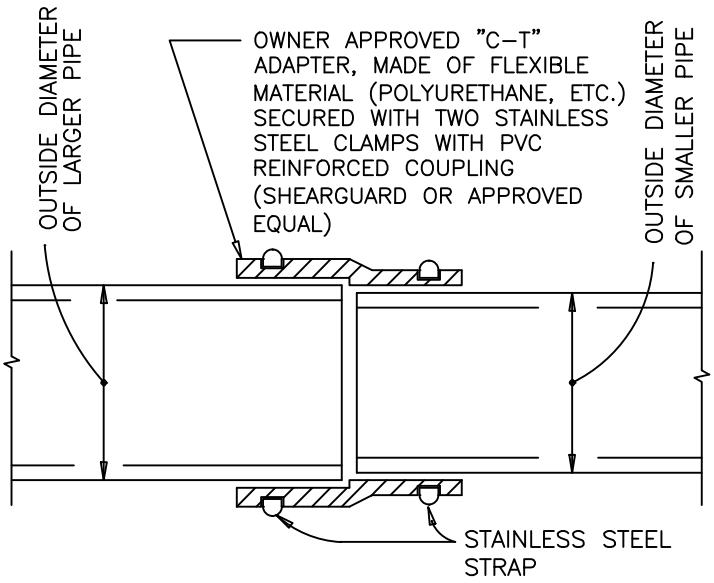

All "C–T" ADAPTERS MUST BE CONCRETE ENCASED

"C–T" PIPE ADAPTER

N.T.S.

NOTE:

THIS DETAIL FOR USE ONLY WHEN NEW MAIN WILL NOT MATE WITH EXISTING MAIN JOINT DUE TO DIFFERENT DIMENSIONS OR MATERIALS AND A MANHOLE IS NOT REQUIRED.

NOT TO SCALE

1858 WEATHERFORD TRUE TEXAS	DATE 01/2020	UTILITY DEPARTMENT	SHEET. #
	DRAWN BY CITY OF WEATHERFORD	WASTEWATER MANHOLE TIE-IN	U20

NOTES:
1. PIPE AND FITTINGS MUST BE SDR-26 PVC AS INDICATED IN THE DRAWINGS.
2. PROVIDE RUBBER SLEEVE COUPLINGS WITH STAINLESS STEEL DOUBLE-BAND REPAIR SLEEVES TO CONNECT TO EXISTING SERVICE. TIGHTEN SLEEVES TO THE TORQUE RECOMMENDED BY THE MANUFACTURER.
3. SEWER SERVICE SHALL INCLUDE ALL APPURTENANCES FROM SEWER MAIN UP TO AND INCLUDING RUBBER SLEEVE COUPLING OR PLUG.
4. CLEANOUTS SHALL BE LOCATED 10' OFFSET FROM CENTER OF LOT ON THE DOWNSTREAM SIDE.

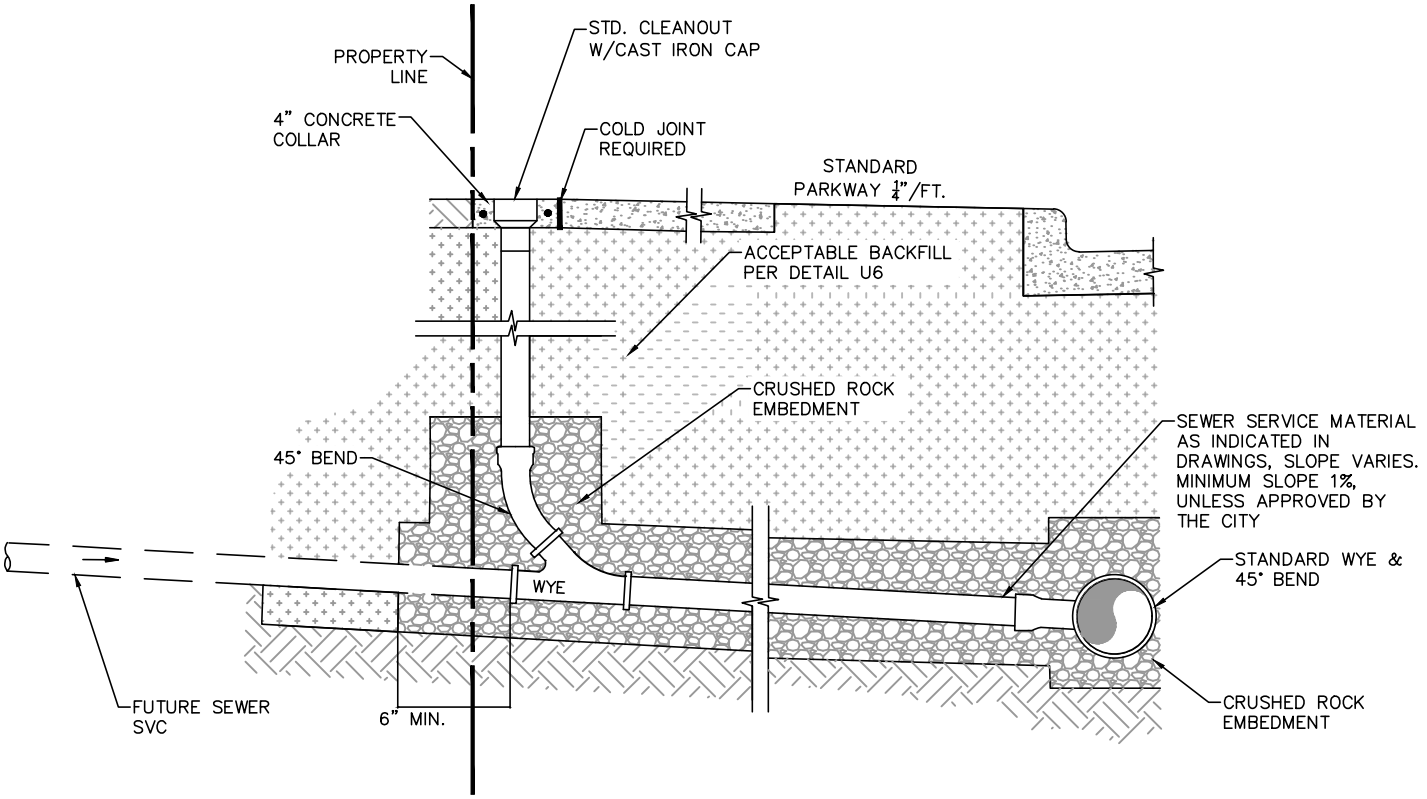

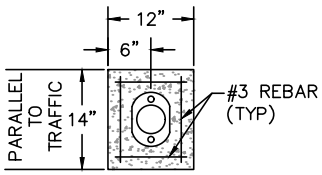

CONCRETE COLLAR
(PLAN VIEW)
(IF LOCATED OUTSIDE OF SIDEWALK)

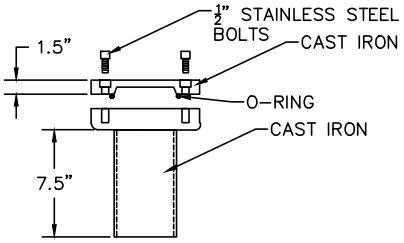

CAST IRON CLEANOUT W/S.S.
BOLTS AND C.I. LID

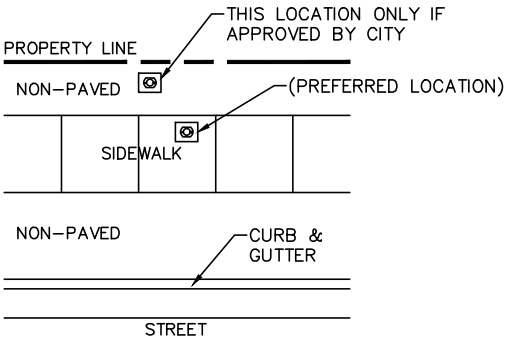

CAST IRON CLEANOUT W/S.S.
BOLTS AND C.I. LID
ALL AREAS

NOT TO SCALE

	DATE	UTILITY DEPARTMENT	SHEET. #
WEATHERFORD 1858 TRUE TEXAS	01/2020		U21
	DRAWN BY	WASTEWATER LATERAL STANDARD INSTALLATION	
	CITY OF WEATHERFORD		

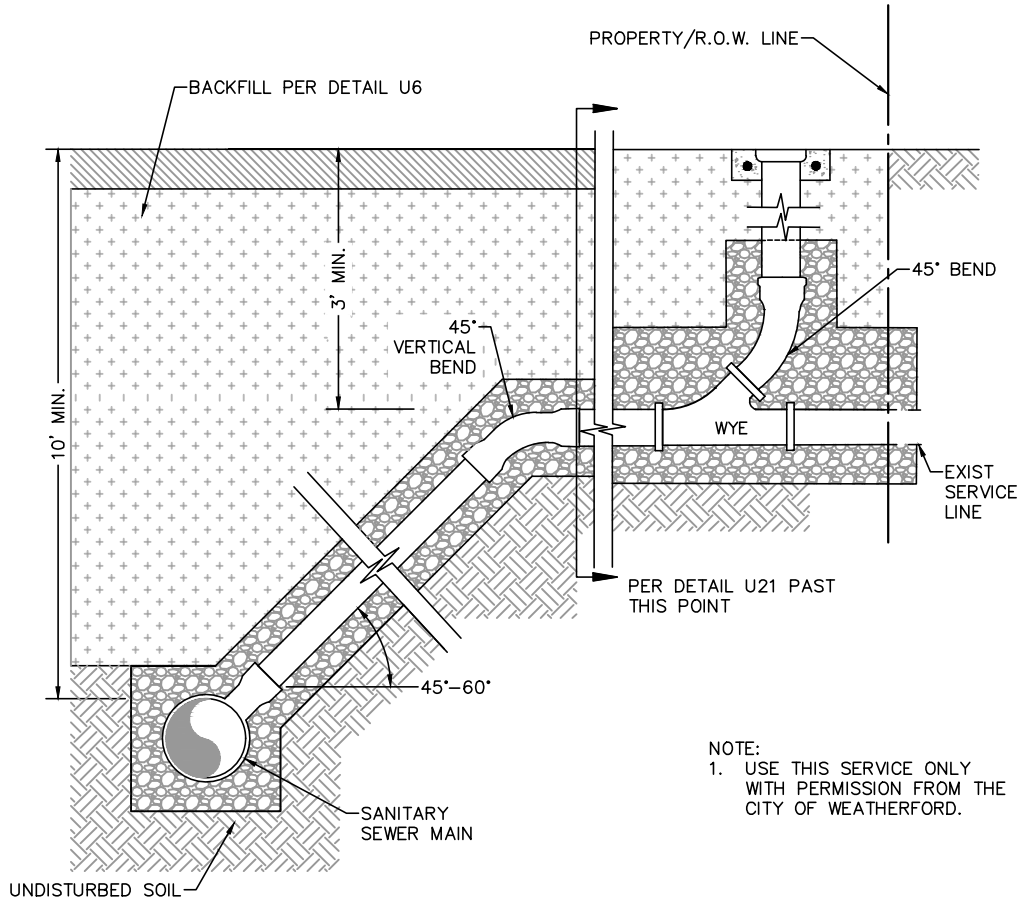

NOTE:
1. USE THIS SERVICE ONLY WITH PERMISSION FROM THE CITY OF WEATHERFORD.

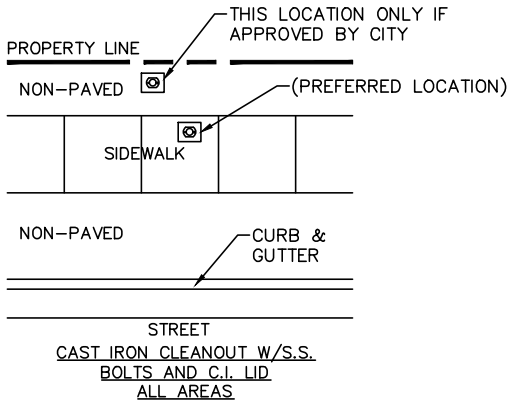

CAST IRON CLEANOUT W/S.S. BOLTS AND C.I. LID ALL AREAS

NOT TO SCALE

	DATE	UTILITY DEPARTMENT	SHEET. #
WEATHERFORD 1858 TRUE TEXAS	01/2020		U22
	DRAWN BY	WASTEWATER LATERAL DEEP INSTALLATION	
	CITY OF WEATHERFORD		

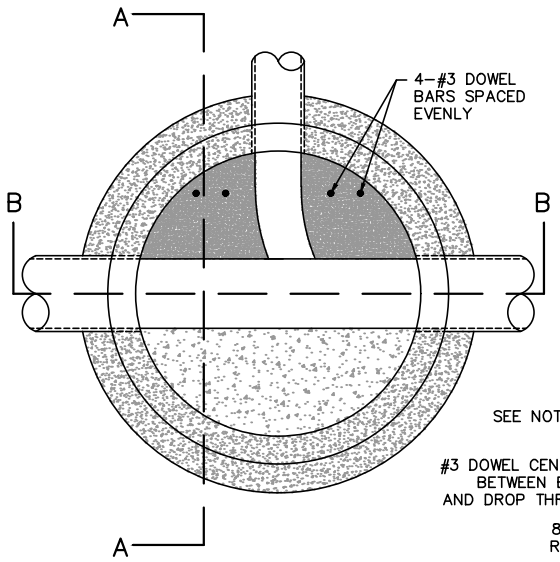

PLAN VIEW

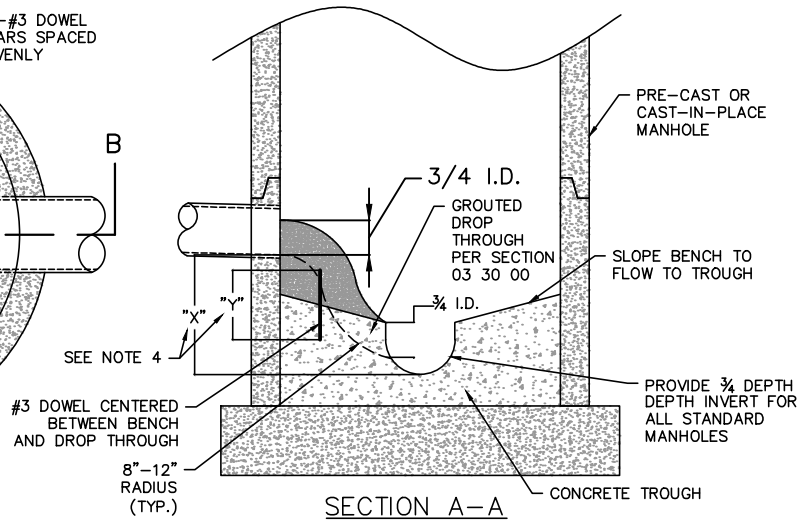

SECTION A–A

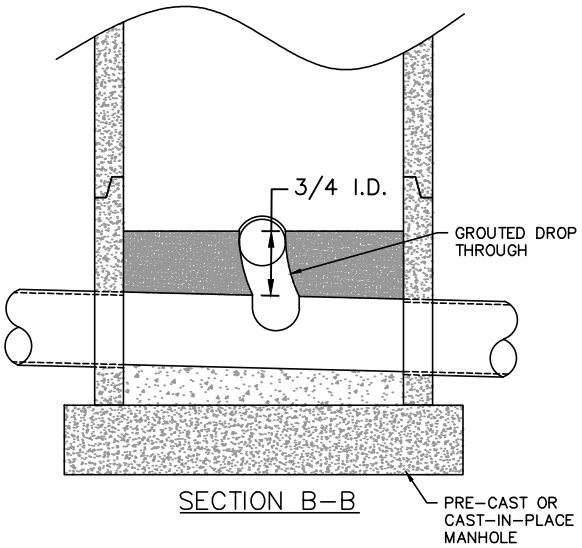

SECTION B–B

NOTES:
1. DROP THROUGH SHALL BE POURED MONOLITHICALLY WITH CAST–IN–PLACE BENCH, OR DOWELED AND GROUTED TO PRE–CAST BENCH.
2. DROP THROUGH SHALL EXTEND INTO MAIN–LINE TROUGH ½ THE INNER DIAMETER OF LATERAL.
3. WHERE LATERAL FLOW–LINE TO MAIN FLOW–LINE IS GREATER THAN 24" AN EXTERNAL DROP SHALL BE REQUIRED.
4. "X" SHALL BE NO MORE THAN 24" FROM FLOW–LINE TO FLOW–LINE. "Y" SHALL BE THE GREATER OF HALF OF "X" OR 6".

NOT TO SCALE

	DATE	UTILITY DEPARTMENT	SHEET. #
WEATHERFORD 1858 TRUE TEXAS	01/2020		U23
	DRAWN BY	WASTEWATER MANHOLE HYDRAULIC SLIDE	
	CITY OF WEATHERFORD		

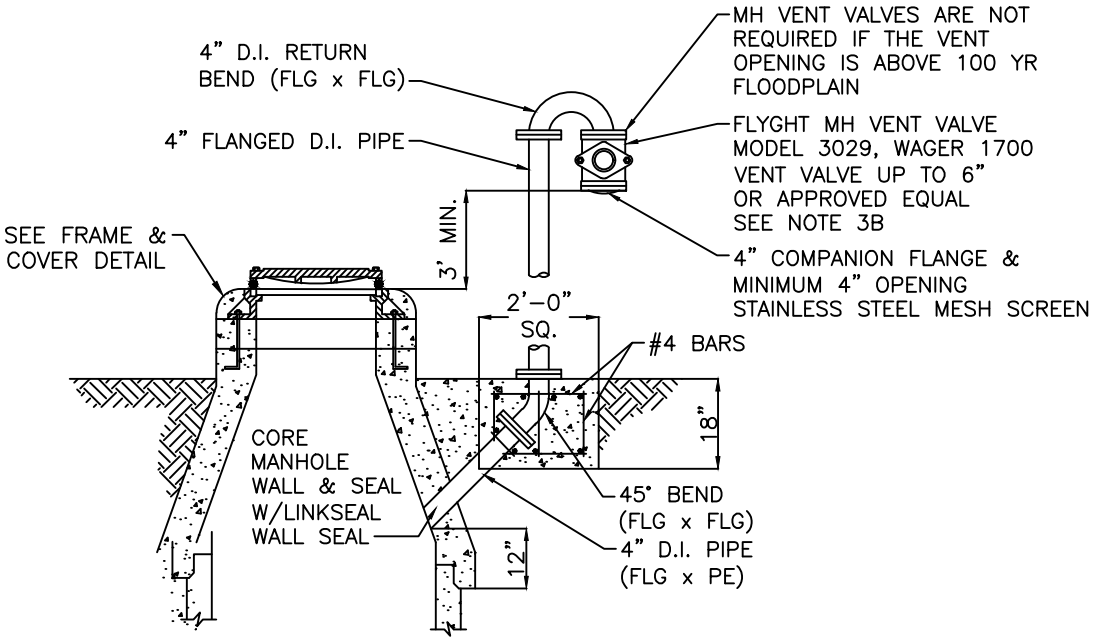

NOTES:

1. DUCTILE IRON PIPE & FITTINGS TO HAVE 40mil POLYETHYLENE INTERIOR COATING.

2. ALL BOLTS & NUTS TO BE 316 STAINLESS STEEL.

3. FINISH COATING:
   A. WIRE BRUSH TO REMOVE ALL DIRT & CONCRETE AND TO ROUGH UP FINISH.
   B. APPLY ONE PRIME COAT OF TNEMEC SERIES 37 CHEM PRIME (GRAY) TO 3mils DRY THICKNESS. GIVE SPECIAL ATTENTION AND SECOND COAT TO CORNERS AND BOLTS.
   C. APPLY ONE FINISH COAT OF TNEMEC SERIES 43-38 ALKYD ALUMINUM TO 2mils DRY THICKNESS.

4. VENT PIPES LONGER THAN 6' TO BE 6"ø D.I. PIPE AND FITTINGS.

NOT TO SCALE

	DATE	UTILITY DEPARTMENT	SHEET. #
WEATHERFORD 1858 TRUE TEXAS	01/2020		U24
	DRAWN BY	WASTEWATER MANHOLE VENT	
	CITY OF WEATHERFORD		

NOTES:
1. ALL PIPE FITTINGS SHALL BE COMPRESSION FITTINGS, STAINLESS STEEL PIPE STIFFENERS REQUIRED.
2. METER BOX FOR SERVICE LINES TO BE INSTALLED AT PROPERTY LINE.
3. METER BOX SHALL NOT BE INSTALLED IN SIDEWALKS OR DRIVEWAYS.
4. METER BOX TO BE FURNISHED BY AND INSTALLED BY CONTRACTOR.
5. METER BOX SHALL BE 18" DIAMETER PVC WITH CAST IRON RING AND LID. WHITE RHINO OR APPROVED EQUAL.
6. ALL METER CAN LIDS SHALL MARKED AS SEWER.
7. 12 AWG TRACING WIRE ON MAIN AND SERVICES.
8. MAXIMUM OF 10 SERVICE CONNECTIONS
9. THIS DETAIL TO BE USED WITH CITY APPROVAL ONLY.

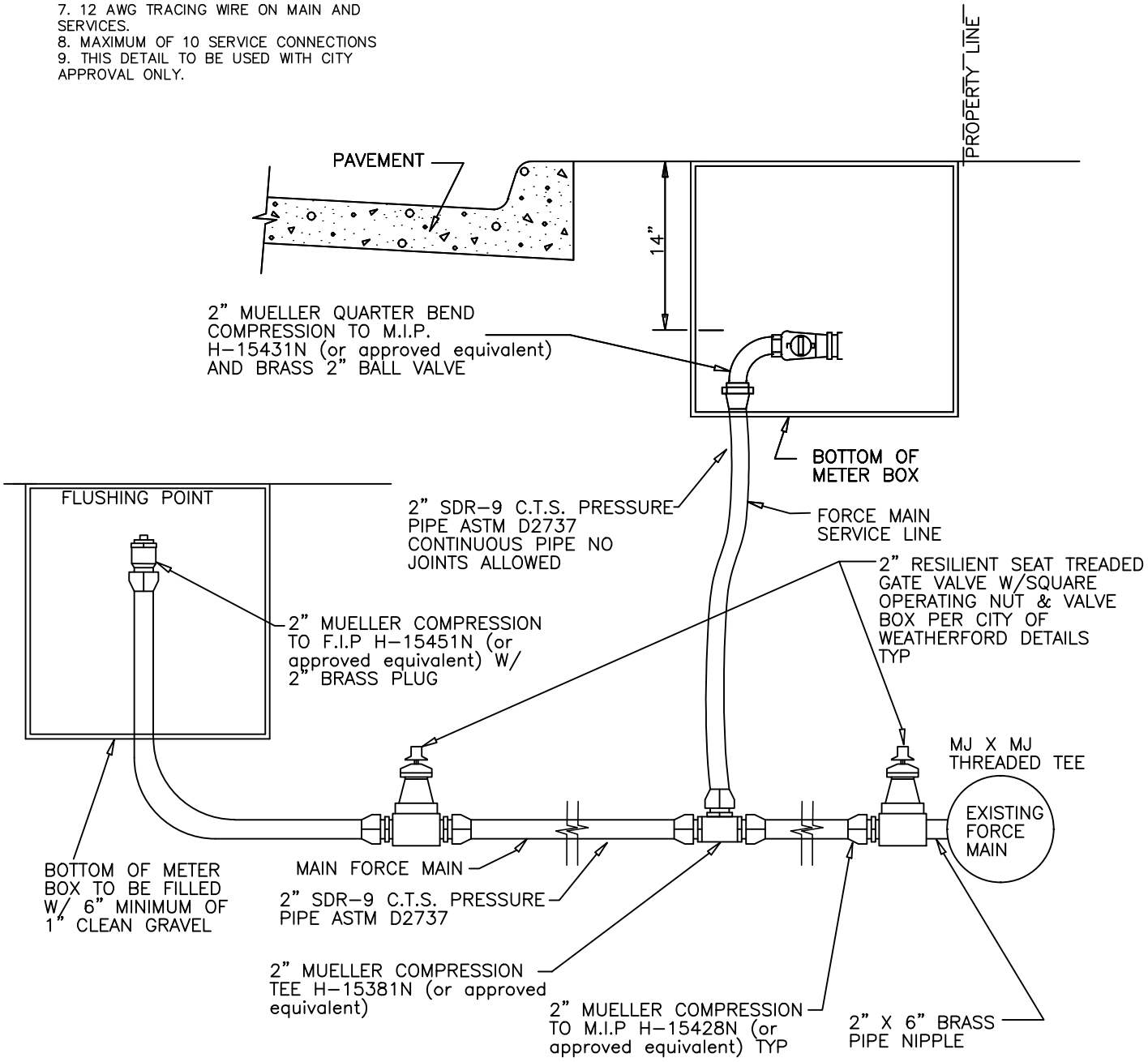

NOT TO SCALE

	DATE	UTILITY DEPARTMENT	SHEET. #
WEATHERFORD 1858 TRUE TEXAS	01/2020		U25
	DRAWN BY	LOW PRESSURE FORCE MAIN 2" LINE SIZE	
	CITY OF WEATHERFORD		

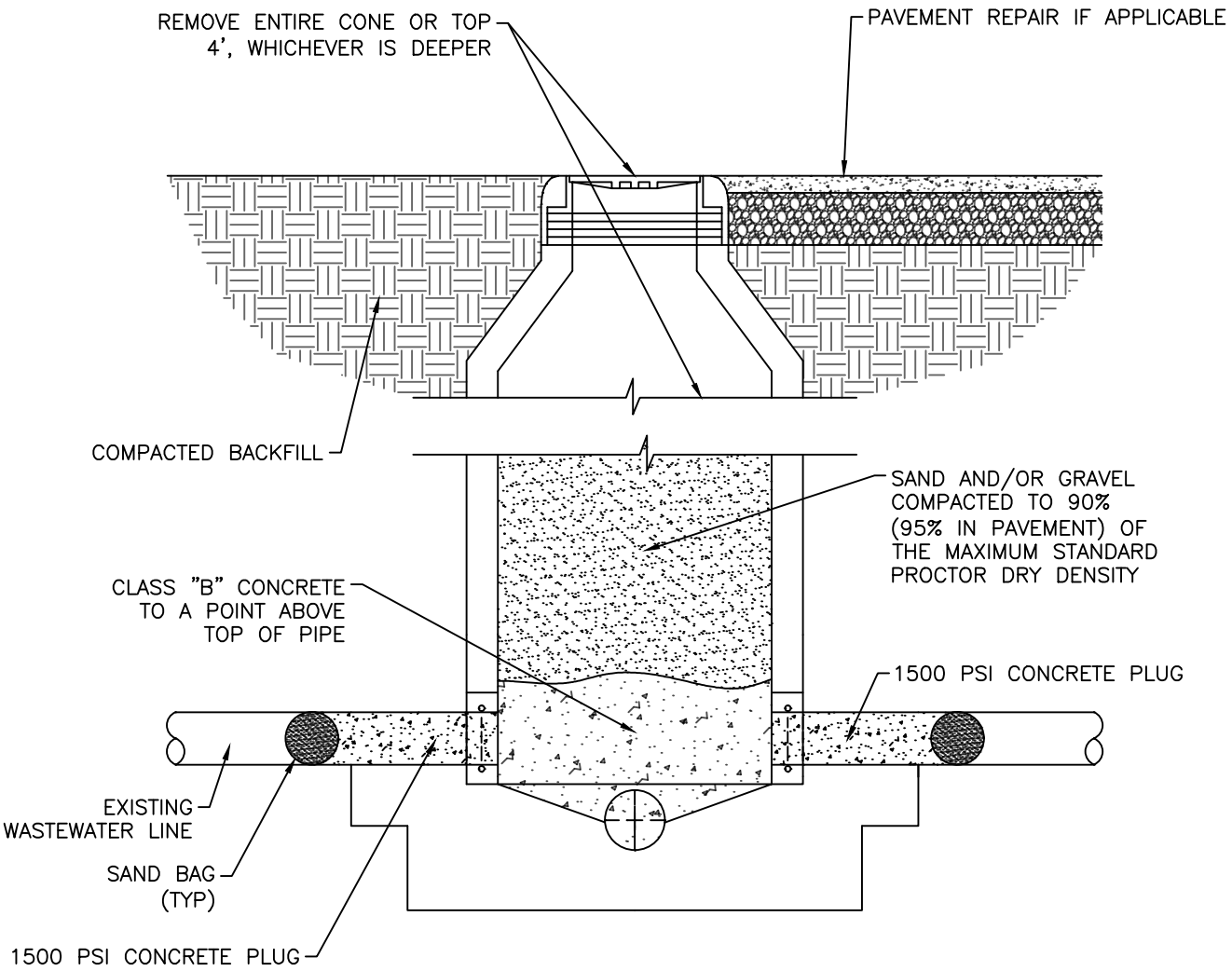

NOT TO SCALE

	DATE	UTILITY DEPARTMENT	SHEET. #
WEATHERFORD 1858 TRUE TEXAS	08/2020		U26
	DRAWN BY	WASTEWATER MANHOLE ABANDONMENT	
	CITY OF WEATHERFORD		

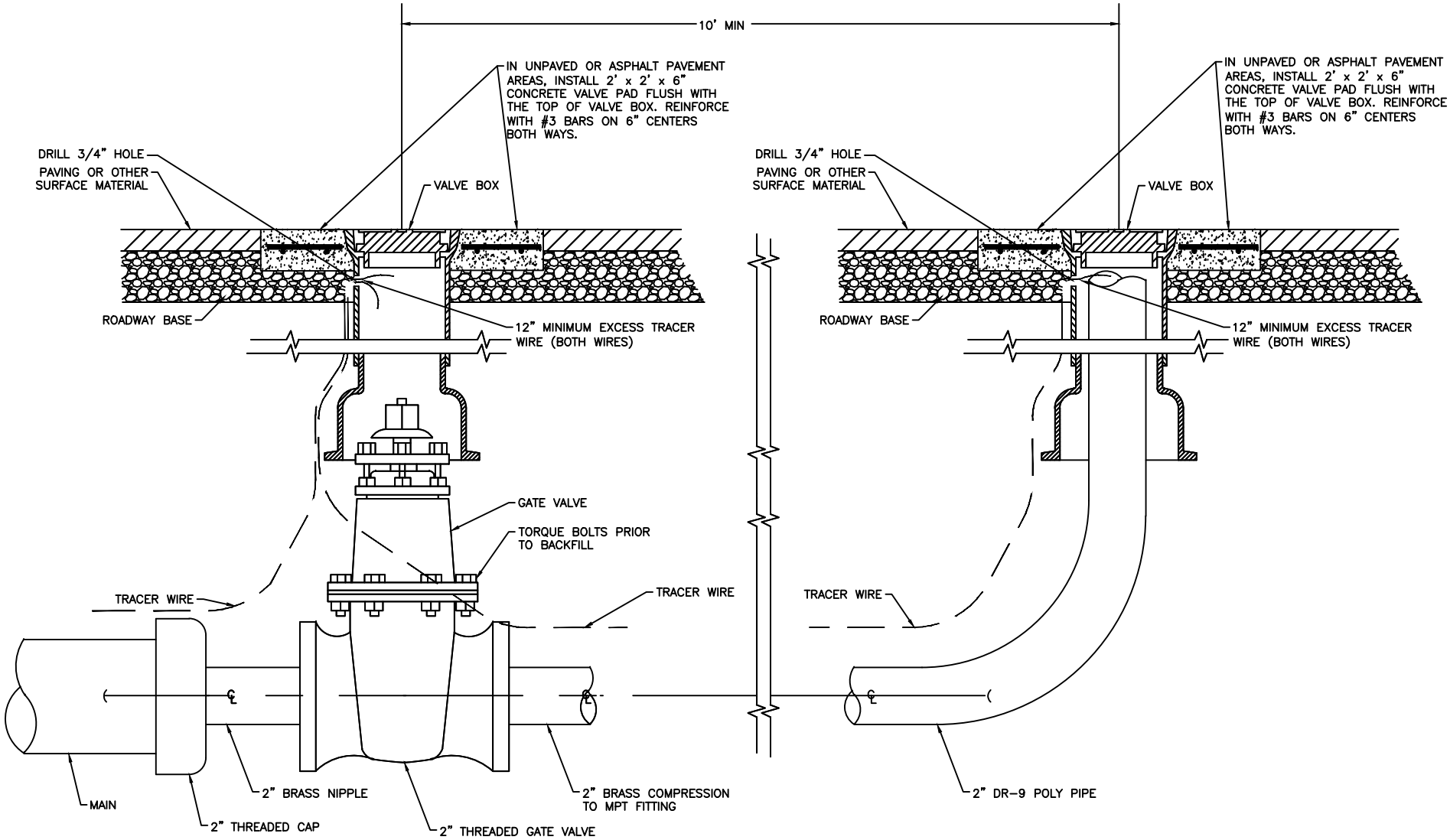

NOT TO SCALE

WEATHERFORD 1858 TRUE TEXAS	DATE 01/2020	UTILITY DEPARTMENT	SHEET. #
	DRAWN BY CITY OF WEATHERFORD	2" FLUSHING POINT	U27

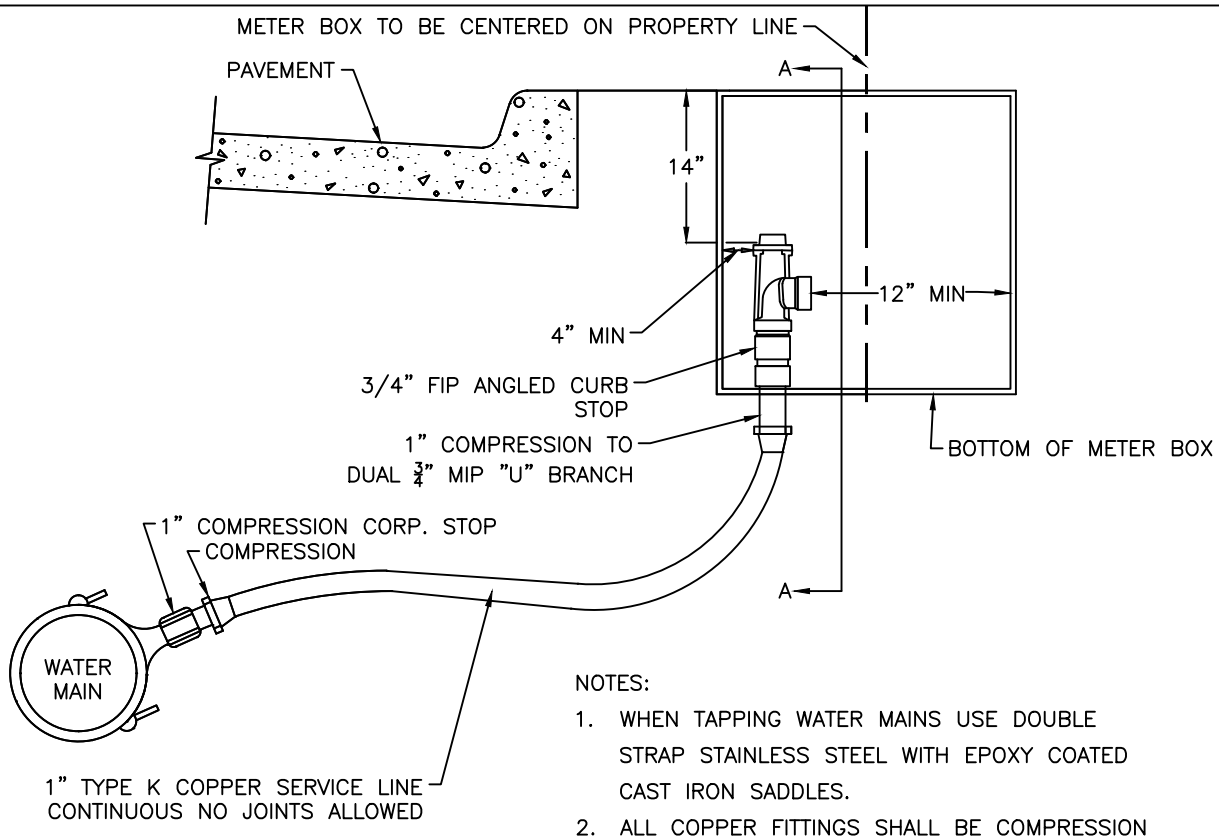

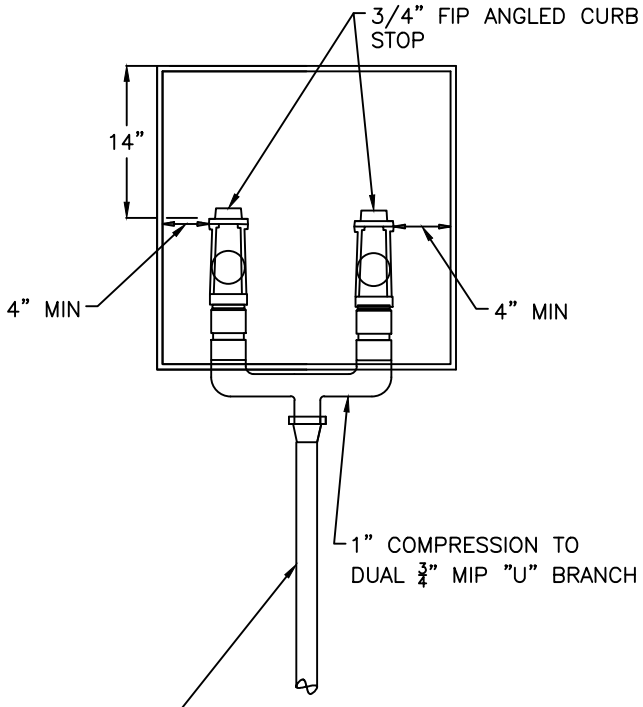

SECTION A–A

NOTES:

1. WHEN TAPPING WATER MAINS USE DOUBLE STRAP STAINLESS STEEL WITH EPOXY COATED CAST IRON SADDLES.
2. ALL COPPER FITTINGS SHALL BE COMPRESSION FITTINGS.
3. ALL SADDLES AND CORP. STOPS SHALL HAVE CC THREADS.
4. METER SHALL NOT BE INSTALLED IN SIDEWALKS.
5. METER BOX TO BE FURNISHED BY AND INSTALLED BY CONTRACTOR.
6. METER BOX SHALL BE 24" DIAMETER PVC WITH CAST IRON RING AND LID. WHITE RHINO OR APPROVED EQUAL.
7. "U" BRANCH SHALL BE FORD U48–43–1.9–NL–G OR APPROVED EQUIVALENT.
8. CURB STOP SHALL BE FORD KV13–332W–NL OR APPROVED EQUIVALENT (3/4" FIP X SWIVEL NUT).
9. ALL METER CAN LIDS SHALL HAVE AMR READER HOLE.
10. CORP. STOP SHALL BE MUELLER H–15008N OR APPROVED EQUIVALENT.
11. METERS INSTALLED IN DRIVEWAYS MUST BE TRAFFIC RATED DFW PLASTICS DFW38C–14MBF–DEEP OR EQUIVALENT.
12. USE RESTRICTED TO DUAL 3/4" METERS TO A SINGLE RESIDENTIAL LOT ONLY.

NOT TO SCALE

	DATE	UTILITY DEPARTMENT	SHEET. #
WEATHERFORD 1858 TRUE TEXAS	01/2020		U28
	DRAWN BY	DUAL 3/4 INCH RESIDENTIAL SERVICE DETAIL	
	CITY OF WEATHERFORD		

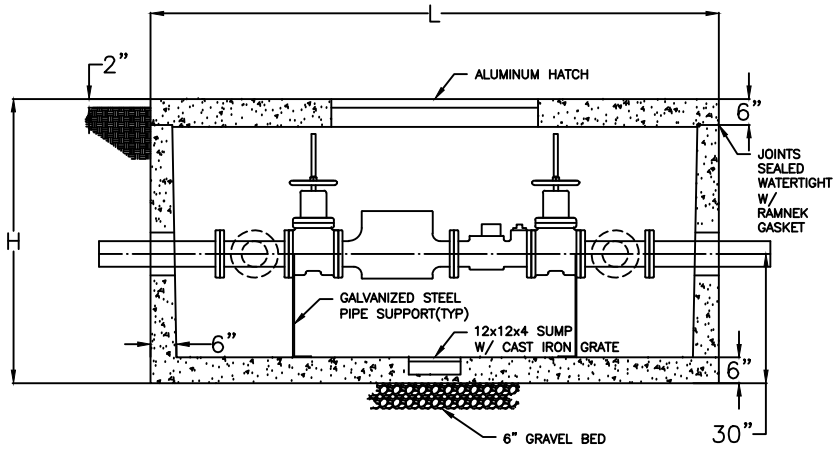

NOTES:

1. BY–PASS MUST BE SAME SIZE AS METER
2. ALL PIPE MUST BE DUCTILE IRON & ALL FITTINGS MUST BE FLANGED INSIDE VAULT
3. ALL VALVES TO BE OS&Y GATE VALVES
4. METER TO BE SENSUS OMNI C2 FOR DOMESTIC OR SENSUS OMNI F2 WITH FIRE FLOW
5. METER REGISTER SET TO CUBIC FEET
6. REGISTER NUMBER MUST MATCH SERIAL NUMBER ON MAIN CASE
7. RADIO TO BE MXU520M
8. METER AND BACKFLOW PREVENTER MUST BE IN SEPARATE VAULTS
9. CONCRETE SHALL BE CLASS "F" WITH MINIMUM DESIGN STRENGTH OF 4200psi @ 28 DAYS
10. GRADE 60 STEEL REBAR CONFORMING TO ASTM A615
11. WALLS MUST BE CAST MONOLITHIC WITH FLOOR
12. 1/4" ALUMINIUM DIAMOND PLATE HATCH WITH EXTRUDED ALUMINUM FRAME CAST INTO LID WITH 316 STAINLESS STEEL SLAM LOCK & HINGES CENTERED OVER METER

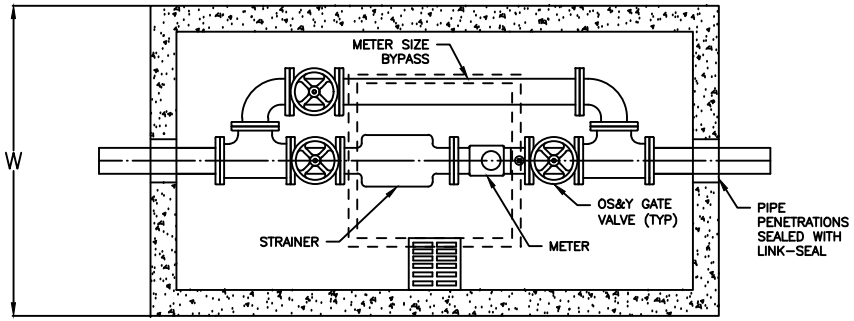

SIZE	L	W	H	HATCH
3"	8'–8"	5'–0"	6'–0"	36" X 36"
4"	8'–8"	5'–0"	6'–0"	36" X 36"
6"	11'–0"	6'–0"	7'–0"	42" X 42"
8"	11'–0"	6'–0"	7'–0"	42" X 42"

NOT TO SCALE

1858 WEATHERFORD TRUE TEXAS	DATE 01/2020	UTILITY DEPARTMENT	SHEET. #
	DRAWN BY CITY OF WEATHERFORD	3" TO 8" METER AND VAULT	U29